COMPRESSOR

LINEAR

AC0610

Compressor Intermediate

MOTOR FREE PISTON SYSTEM

Airflow & Power Consumption

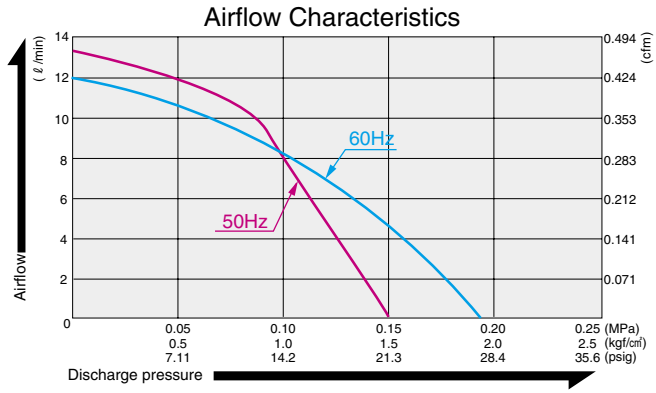

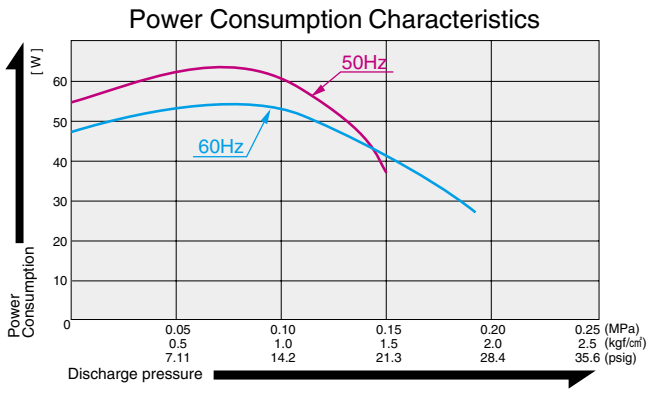

Specifications

	(SI)	(EURO)	(U.S.A.)
Rated Pressure	0.1 MPa {1.0 kgf/cm²}	1.0 bar	14.2 psig
Rated Airflow	8 ℓ /min		0.283 cfm
Rated Voltage	115 V AC or 230 V AC		
Maximum Pressure	0.15 MPa {1.5 kgf/cm²}	1.5 bar	21.3 psig
Power Consumption	52 W or 60 W		
Rated Frequency	60 Hz or 50 Hz		
Life Expectancy	3,000 hours		
Outlet	ISO Rc 1/4 (female threaded)		
Duty Cycle	Continuous		
Coil Insulation Class	E or its equivalent (JETL) and B for UL		
Mounting Dimensions	68 (L) x 84 (W) mm		2-11/16"(L) x 3-5/16"(W)
Gross Weight	3.2 kg		7.1 Lbs.
Leadwire Length	270 mm or 200 mm		7-7/8" for 115 V

Please read the page of "How to Use This Catalog" first for correct use of compressors and pumps.

Application Examples

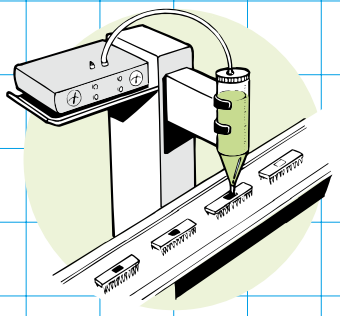

Dispenser

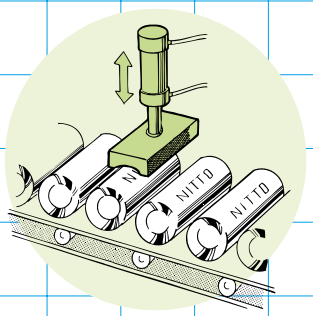

Automatic Stamper

Sketch Drawing and Mounting Dimensions Diagram (mm)

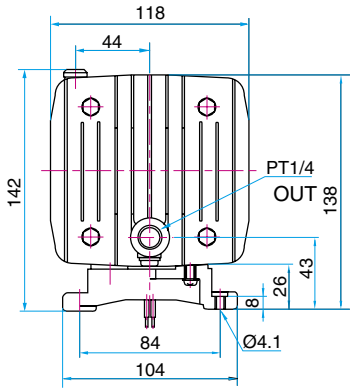

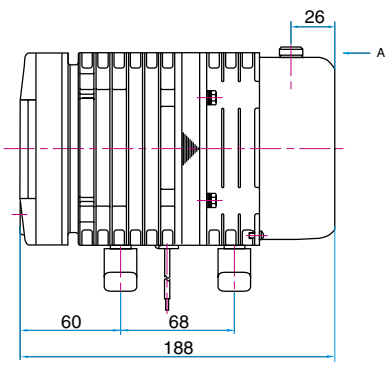

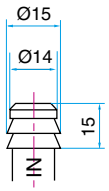

View A