NITTO KOHKI

Lk001d

Linear-motor-driven Free Piston Pumps and other Pumps for various applications

AIR COMPRESSORS, VACUUM PUMPS & LIQUID PUMPS

GENERAL CATALOG

Contents

Green Procurement

Nitto Kohki has made every effort in developing "Environmental Improvement Plans" through the implementation of ISO14001, to execute environmentally conscious business activities on a company-wide basis. As a part of our ongoing commitment to the environment, we are also committed to reduce and/or exclude restricted substances from our products as designated by RoHS directives, laws and regulations of chemical substances.

LINEAR MOTOR

DRIVEN FREE PISTON

The Linear-motor-driven Free future product designs but also systems. Compact, quiet, and Free Piston Pump will enhance extend its operating life.

Performance Specifications and Suggested Control Limits

The numeric data suggested in performance charts and external dimensions in this catalog do not include tolerances allowed in mass production, but do indicate average values to serve as technical suggestions for your appropriate selection and operation of the pumps.

Our air compressors and vacuum pumps are unique products featuring a Linear-motor-driven Free Piston System. Nitto Kohki has made available a complete series of air compressors and vacuum pumps that incorporate this revolutionary mechanism. These are quite appropriate as air sources or vacuum units for various pneumatically operated equipment and apparatus in advanced industries.

Compact Integrated Design

This unique system enables the mechanical resonance of a single part. An incredibly compact, lightweight design is achieved by combining what are entirely independent functions in conventional pumps – the motor and the compressor – into a superior single, unified structure.

Linear-motor-driven Free Piston Mechanism

The Electro-magnet and return spring alternatively drive the piston inside the cylinder, the mechanical resonance of which is synchronized with the input current cycle. In a single mechanism, the piston combines the functions of two normally independent devices; the pump and the motor.

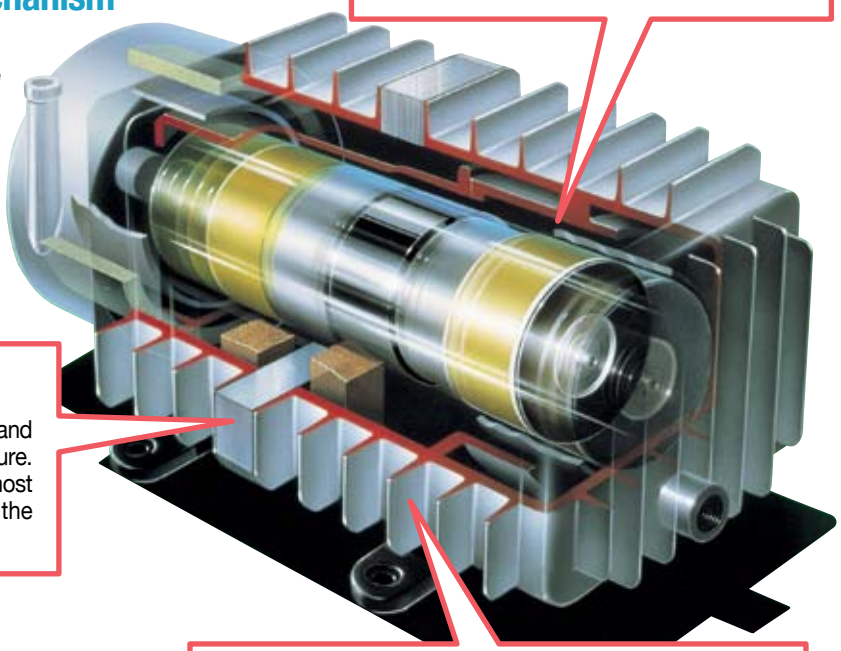

Self-cooling Design

Cool intake air passes over the coils to reduce and control the rise in the pump's internal temperature. As a result of this feature, it is possible to almost completely seal the unit, thus improving the suppression of internal operating noise.

Overpressure Control Mechanism

Should the output pressure exceed the rated value, the piston will automatically adjust to a shorter stroke. Simultaneously, power consumption will automatically reduce to prevent the motor from failing or being burnt out.

Piston System is not only ideal for for upgrading next-generation vibration free, the extremely reliable your system performance and

Easy Maintenance

Replacement of piston can be easily performed by simply removing the screws holding the head cover in place. The completely oil-less construction is achieved by the combination of smooth Teflon seals with superior resistance against abrasion on sliding piston surfaces and "air bearing effect" created by the unique air path design.

*Please receive technical guidance from Nitto Kohki before replacing the piston.

Fewer Components

This uniquely simple and reliable design has no complicated transmission components such as crankshafts, connecting rods, ball bearings, etc. typically found in conventional pump designs. Fewer parts mean fewer problems.

Operating Principle

A silicon diode[*1] in between the coils or inverter[*2] converts the full-wave input current into half-rectified current. In turn this activates and deactivates the electro-magnet, producing a smooth mechanically resonating action.

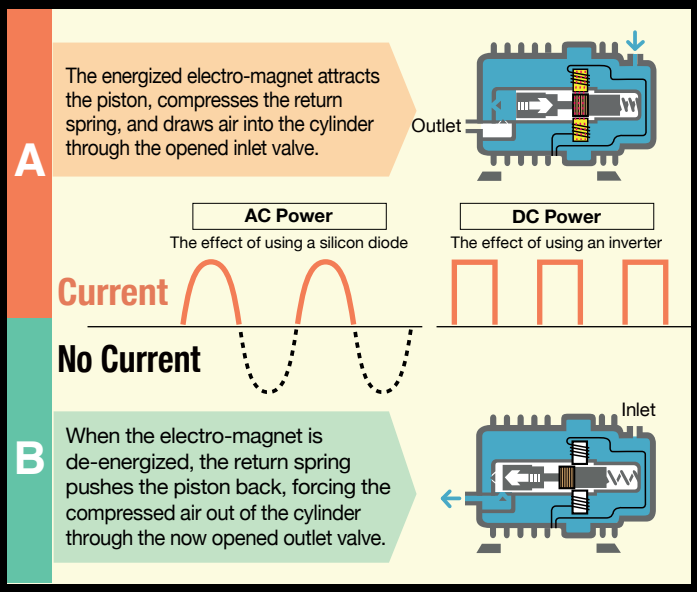

Repeating the movements of A and B delivers the function of compressor or vacuum pump.

*1) Incorporated in AC models *2) Incorporated in DC models

Experience gained in designing, engineering, manufacturing and continually perfecting our products in thousands of applications has resulted in a "functionally intelligent" package. Please review these key design features and see how every design element contributes overall to the creation of a superior compressor or vacuum pump.

The Key Design Features of the Linear-motor-driven Free Piston System

Compact and Lightweight
with the motor and compressor combined into the single structure

With the piston as the only moving part, efficient space utilization enables our pump to be considerably smaller and lighter than other pumps. This allows the OEM design engineer increased packaging options for other internal components.

Low Vibration
Using an ultra-lightweight piston

Reducing the moving parts to only the piston minimizes reactive force vibrations to the pump body. In addition, the secondary vibrations are isolated or absorbed through the anti-vibration rubber feet.

Low Noise Level
No transmission assemblies, means less noise

With no need for complicated transmission mechanisms riding on ball bearings, or actuating linkages creating friction and noise, Nitto Kohki's pumps are inherently quieter. Additionally, the almost completely sealed configuration further suppresses secondary internal operating noises.

Clean Operation – Clean Air
Due to oil-less construction

All wearing surfaces use no oil, grease or other contaminating lubricants. The combination of a precision Teflon sleeved piston assisted by an "air-bearing effect" made possible through a unique air path design, assures that the outlet air is completely free of oil.

Low Power Consumption
Truly energy efficient through integrated design

Since the low mass piston is the only moving part, frictional losses are minimized, allowing lower starting and running current, and thus greater efficiency. Related benefits are realized through a lower rise in temperature, facilitating a longer operating life for the pump and the other components within your system.

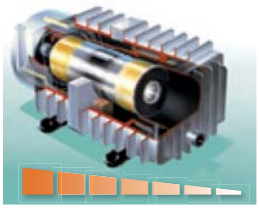

Overload Protection Structure
protects against burnout

As the pressure within the compressor increases, the piston stroke decreases. Along with this, electric current decreases. Thus a temporary overload will not cause a failure or the pump to burnout.

Minimal Pulsating Effect
due to the ideal piston stroke

The piston's mechanical resonance speed is synchronized with the input power frequency regardless of the load, i.e., 3000 strokes at 50Hz, and 3600 strokes at 60Hz per minute. This high speed produces shorter pulses which translate into a smoother, more uniform and "linear" motion.

Instant Response
enabling easy start-ups in frequent on-off short cycle applications

A very low starting current enables our pumps to produce immediate performance in quick short cycle applications, even in the presence of residual back pressure.

Easy Maintenance
Only air filter and piston to change

The oil-less construction requires no lubrication. A simple mechanism containing the piston as the only moving part causes no failure or burning due to an overload and provides stable performance over a long period of time.

Longer Durability
increased OEM value

All key design features listed here combine to provide superior performance in all the important aspects of superior pump design. This enables the OEM engineer to have complete confidence in incorporating the unit into the most demanding systems, in the most advanced equipment.

How to Use This Catalog

This catalog is designed to help you in selecting the most appropriate product for your specific application. The INDEXS on page 1, 2, and 3 show the corresponding pages to particular models. The page on which each model is shown consists of a specification table, a performance chart, a power consumption chart, and an external/mounting dimensions diagram. Be sure to read the following "Explanation of Technical Terms" before selecting a model appropriate for your application.

Explanation of Technical Terms

For Compressors

Rated pressure:	This is the pressure point where you will get optimum capabilities for performance and service life and where the pump is designed to have almost the same airflow regardless of a rated frequency of 50Hz or 60Hz.
Rated airflow:	The discharge airflow volume at the rated pressure.
Rated operation:	Operating conditions regarding the rated pressure, rated voltage, and rated frequency.
Maximum pressure:	The highest obtainable pressure at which the pump is designed to operate while producing zero discharge airflow (not guaranteed; for reference only).
Power consumption:	The wattage during operation at the rated pressure.
Current:	The electric current during operation at the rated pressure (for reference only).
Duty cycle:	The period of operation under the condition that the coil temperature will not exceed the coil insulation class limit.
Airflow characteristics:	Discharge pressure-airflow curve (for reference only).
Power consumption characteristics	Discharge pressure-power consumption curve (for reference only).

For Vacuum Pumps

Maximum vacuum:	The highest vacuum the pump can attain with the pump inlet closed (except some of the exclusive models).
Free air displacement:	The airflow volume at zero vacuum (within three (3) minutes after starting).
Power consumption:	The maximum wattage on the power consumption curve when measured against vacuum levels up to the pumps attainable vacuum.
Electric current:	The maximum electric current on the current characteristics curve when measured against vacuum levels up to the pumps attainable vacuum. (for reference only).
Duty cycle:	The period of operation under the condition that the coil temperature will not exceed the coil insulation class limit.
Airflow characteristics:	Vacuum-airflow curve (for reference only).
Power consumption characteristics:	Vacuum-power consumption curve (for reference only).
Exhaust characteristics:	The time required to attain the respective vacuum in a 10 liter container (for reference only).

For DC Pumps

Operating ambient temperature:	0 to 40°C (5 to 50°C for DP0105 only)
Operating ambient humidity:	30 to 85% non-condensing

Start-up the pump at the same level as the atmospheric pressure (Similarly in the case of DPE series pumps)

Application Examples and Applicable Fluids for Compressors and Vacuum Pumps

Application: for incorporation into equipment **Applicable fluid:** Air

For Compressors & Vacuum Pumps

Rated performance:	The average total accumulated time over which the unit can be used without repair, except the maintenance of the filter. This indicates the expected time required for the rated air flow to fall to 80% of the specification value. The actual life might vary depending on the actual operating and environmental conditions such as output pressure setting, maintenance schedule, ventilation, ambient temperature, duty cycle, etc.
Rated voltage:	The two major types are 115V AC/60Hz and 230V AC/50Hz (excluding DC motors). While most models can be operated at both 50Hz and 60Hz with different performance characteristics, there are some models that are frequency specific.
Rated frequency:	In the case of AC drive pumps, the rated frequency will vary according to the model. While some are designed for only 50Hz or for 60Hz, some are designed for both 50Hz and 60Hz.
Coil insulations:	The suggested class, most bare units attaining "E" class, is based on Japanese electric regulations. They are merely suggestions since bare units are considered "components" and are not classified as complete products or systems.
Control method:	Be careful when controlling compressors and vacuum pumps with electronic components because the power factor depends upon the load.

Coil Insulation Class (for reference only)	(Temperature limit, degrees C)
A	100
E	115
B	125
F	150

Outside & mounting dimensions:	Useful for assessing the required space for installation. Include sufficient space surrounding the pump when designing it into your application.
Operating ambient temperature:	0 to 40°C
Operating ambient humidity:	30 to 85% non-condensing

For Liquid Pumps

Self-priming power:	The power the pump requires to draw up 25°C water. 1 kPa is equal to the power needed to draw up 25°C water 10 cm.

Improvement Suggestion

Our compressors and vacuum pumps employ a unique internal coil cooling feature to reduce or control the rise in internal temperature. If they are operated at higher than rated pressures, elevated temperatures may result. Should these temperatures become excessive, operating duty cycles may need to be reduced, or the use of an auxiliary cooling fan should be considered.

This catalogue will give the guidelines needed to determine the appropriate model for your application(s). However, in certain cases you may need further detailed information, which will be provided in the form of a specifications sheet for each model/version by our technical staff who will further assist you in your selection.

Specifications and designs are subject to change at any time without notice.
It is recommended that OEM customers confirm the required specifications in writing before placing orders.

Series Selection

AC Linear Free Piston Compressor

Model	Rated Pressure		Max. Pressure		Rated Pressure & Max. Pressure	Rated Airflow		Rated Airflow	Page
	kPa	psig	kPa	psig		L/min	cfm		
AC0102	20	2.84	40	5.69		5	0.177		9
AC0201A	10	1.42	20	2.84		20	0.71		10
AC0301A	10	1.42	30	4.27		28	0.99		11
AC0401A	10	1.42	35	4.98		35	1.24		12
AC0602	15	2.13	35	4.98		40	1.41		13
AC0901	10	1.42	40	5.69		80	2.83		14
AC0902	20	2.84	45	6.40		55	1.94		15
AC0105	50	7.11	80	11.4		2.5	0.088		16
AC0110	100	14.2	120	17.1		0.8	0.028		17
AC0207	70	9.96	100	14.2		3.5	0.124		18
AC0410A	100	14.2	130	18.5		5	0.177		19
AC0610A	100	14.2	150	21.3		8	0.283		20
AC0910	100	14.2	150	21.3		16	0.57		21
AC0920	200	28.4	300	42.7		8	0.283		22

0 50 100 150 200 250 300(kPa)

0 20 40 60 80 100 120 (L/min)

AC Linear Free Piston Vacuum Pump

Model		Attainable Vacuum	Attainable Vacuum		Free Air Displacement		Free Air Displacement	Page
			kPa	in.Hg	L/min	cfm		
VP0125			-33.3	-9.84	7	0.247		25
VP0140			-53.3	-15.7	3	0.106		26
VP0435A			-46.7	-13.8	25	0.88		27
VP0450			-66.7	-19.7	18	0.64		28
VP0625			-33.3	-9.84	40	1.41		29
VP0660			-80	-23.6	25	0.88		30
VP0925A			-33.3	-9.84	80	2.83		31
VP0940			-53.3	-15.7	60	2.12		32
VP0940T			-53.3	-15.7	120	4.24		33
VP0645			-60	-17.7	10	0.35		34
VP0945			-60	-17.7	12	0.42		35
VP0660x2	Series		-93.3	-27.6	25	0.88		36
	Parallel		-80	-23.6	50	1.77		36

(kPa) -100 -80 -60 -40 -20 0

0 20 40 60 80 100 120 (L/min)

DC Linear Free Piston Compressor

Model	Rated Pressure		Max. Pressure		Rated Pressure & Max. Pressure	Rated Airflow		Rated Airflow	Page
	kPa	psig	kPa	psig		L/min	cfm		
DAH102-X1	20	2.84	50	7.11		5	0.177		39
DAH102-Y1	20	2.84	50	7.11		5	0.177		40
DAH105-X1	50	7.11	80	11.4		2.5	0.088		41
DAH105-Y1	50	7.11	80	11.4		2.5	0.088		42
DAH110-X1	100	14.2	120	17.1		1.0	0.035		43
DAH110-Y1	100	14.2	120	17.1		1.0	0.035		44

0 50 100 150 200 250 300(kPa)

0 20 40 60 80 100 120 (L/min)

DC Linear Free Piston Vacuum Pump

Model	Attainable Vacuum	Attainable Vacuum		Free Air Displacement		Free Air Displacement	Page
		kPa	in.Hg	L/min	cfm		
DVH130-X1		-40	-11.8	7	0.247		47
DVH130-Y1		-40	-11.8	7	0.247		48
DVH145-X1		-60	-17.7	3	0.106		49
DVH145-Y1		-60	-17.7	3	0.106		50

(kPa) -100 -80 -60 -40 -20 0

0 20 40 60 80 100 120 (L/min)

AC Linear Diaphragm Pump (Blower Type)

Model	Rated Pressure		Max. Pressure		Rated Pressure & Max. Pressure	Rated Airflow		Rated Airflow	Page
	kPa	psig	kPa	psig		L/min	cfm		
VC0100	4	0.57	16	2.28		6	0.212		54
VC0101	10	1.42	20	2.84		10	0.35		56
VC0101E	10	1.42	20	2.84		15	0.53		58
VC0101S	5	0.71	26	3.70		15	0.53		60
VC0201	10	1.42	18	2.56		20	0.71		62
VC0301	10	1.42	20	2.84		25	0.88		64
VC0201B	10	1.42	18	2.56		20	0.71		66
VC0301B	10	1.42	20	2.84		25	0.88		68

0 50 100 150 200 250 300(kPa) 0 20 40 60 80 100 120 (L/min)

AC Linear Diaphragm Pump (Dual Type)

Model	Attainable Vacuum	Attainable Vacuum		Rated Pressure		Max. Pressure		Rated Pressure & Max. Pressure	Rated Airflow		Rated Airflow	Page
		kPa	in.Hg	kPa	psig	kPa	psig		L/min	cfm		
VC0100		-14.7	-4.33	4	0.57	16	2.28		6	0.212		53
VC0101 120 V		-18.7	-5.51	10	1.42	18	2.56		10	0.35		55
VC0101 230 V		-10	-2.95	10	1.42	15	2.13		10	0.35		55
VC0101E		-18.7	-5.51	10	1.42	20	2.84		15	0.53		57
VC0101S		-24	-7.09	5	0.71	26	3.70		15	0.53		59
VC0201		-18.7	-5.51	10	1.42	18	2.56		20	0.71		61
VC0201B		-18.7	-5.51	10	1.42	18	2.56		20	0.71		65
VC0301		-21.3	-6.30	10	1.42	20	2.84		25	0.88		63
VC0301B		-21.3	-6.30	10	1.42	20	2.84		25	0.88		67
VCK0120 (Vacuum only)		-26.7	-7.87						18*	0.64*		69

(kPa) -80 -60 -40 -20 0 0 50 100 150 (kPa) 0 20 40 60(L/min)

*Free Air Displacement

DC Compressor and Vacuum Pump

Model	Attainable Vacuum	Attainable Vacuum		Max. Pressure		Max. Pressure	Free Air Displacement		Free Air Displacement	Page
		kPa	in.Hg	kPa	psig		L/min	cfm		
DP0125		-33.3	-9.84	30	4.27		2.5	0.088		71
DP0140		-53.3	-15.7	50	7.11		4	0.141		72
DP0102		-26.7	-7.87	45	6.40		5	0.177		73
DP0102S		-26.7	-7.87	45	6.40		7	0.247		74
DP0102H-X1		-50.7	-15.0	80	11.4		4	0.141		75
DP0110-X1		-66.7	-19.7	150	21.3		7.5	0.265		81
DP0110-Y1		-66.7	-19.7	150	21.3		7.5	0.265		82
DP0110-X3		-66.7	-19.7	150	21.3		7.5	0.265		83
DP0110T-X1		-60	-17.7	150	21.3		5.5	0.194		84
DP0110T-Y1		-60	-17.7	150	21.3		5.5	0.194		85
DP210T-X1		-60	-17.7	150	21.3		10	0.35		86
DP210T-Y1		-60	-17.7	150	21.3		10	0.35		87
DP0105-X1		-66.7	-19.7	250	35.6		2.8	0.099		77
DP0105-Y1		-66.7	-19.7	250	35.6		2.8	0.099		78
DP0102H-X2 (Compressor only)				80	11.4		4	0.141		76
DPA0105-X1 (Compressor only)				220	31.3		2.8	0.099		79
DPA0105-Y1 (Compressor only)				220	31.3		2.8	0.099		80
DP0410-X2 (Compressor only)				180	25.6		18	0.64		90
DP0410-Y2 (Compressor only)				180	25.6		18	0.64		91
DP0410-X1 (Vacuum only)		-77.3	-22.8				18	0.64		88
DP0410-Y1 (Vacuum only)		-77.3	-22.8				18	0.64		89

(kPa) -80 -60 -40 -20 0 0 50 100 150 200 250 (kPa) 0 20 40 60(L/min)

Conversion Tables

Pressure / Flow Rate / Vacuum

Pressure

kPa	kgf/cm^2 (bar)	psig
300	3.0	42.7
280	2.8	39.8
250	2.5	35.6
200	2.0	28.5
180	1.8	25.6
150	1.5	21.3
120	1.2	17.1
100	**1.0**	**14.2**
80	0.8	11.4
70	0.7	9.96
50	0.5	7.11
45	0.45	6.40
40	0.4	5.69
35	0.35	4.98
34	0.34	4.84
30	0.3	4.27
20	0.2	2.84
18	0.18	2.56
15	0.15	2.13
11	0.11	1.56
10	0.1	1.42
7	**0.07**	**1.00**
5	0.05	0.71
1	0.01	0.142
* 0	0	0

Flow Rate

CFM	LPM	CFM	LPM
0.035	**1.00**	2.12	60.0
0.070	2.00	2.25	63.7
0.100	2.83	2.47	70.0
0.105	3.00	2.50	70.8
0.177	5.00	2.65	75.0
0.250	7.08	2.75	77.9
0.353	10.0	2.83	80.0
0.500	14.2	3.00	85.0
0.530	15.0	3.18	90.0
0.708	20.0	3.25	92.0
0.750	21.2	3.50	99.1
0.883	25.0	3.53	100
1.00	**28.32**	3.75	106
1.06	30.0	3.89	110
1.24	35.0	4.00	113
1.25	35.4	4.24	120
1.41	40.0	4.50	127
1.50	42.5	5.00	142
1.59	45.0	5.30	150
1.75	49.6	6.00	170
1.77	50.0	7.00	198
2.00	56.6	7.06	200

Vacuum

kPa	mmHg	mbar	in.Hg
* 0	0	0	0
−13.3	−100	−133	−3.94
−26.7	−200	−267	−7.87
−33.3	−250	−333	−9.84
−44.0	−330	−440	−13.0
−45.3	−340	−453	−13.4
−46.7	−350	−467	−13.8
−53.3	−400	−533	−15.7
−60.0	−450	−600	−17.7
−66.7	−500	−667	−19.7
−73.3	−550	−733	−21.7
−80.0	−600	−800	−23.6
−93.3	−700	−933	−27.6
−100	−750	−1000	−29.5
** −101.3	−760	−1013	−29.9

* Gauge pressure
** Absolute vacuum

Pressure

from \ to	kPa	kgf/cm^2	bar	psig
kPa	1	0.01	0.01	0.142
kgf/cm^2	100	1	1	14.2
bar	100	1	1	14.2
psig	7	0.07	0.07	1

Vacuum

from \ to	kPa	mmHg	in.Hg	mbar
kPa	−1	−7.50	−0.295	−10
mmHg	−0.133	−1	−0.0394	−1.335
in. Hg	−3.39	−25.4	−1	−33.92
mbar	−0.1	−0.75	−0.0295	−1

AIR COMPRESSOR

AC LINEAR

Free Piston Compressor

Page

Compressor

Model AC0102

115V/230V 230V

Airflow & Power Consumption

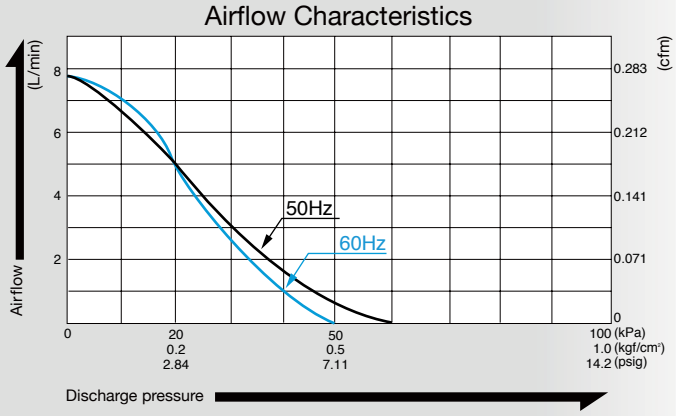

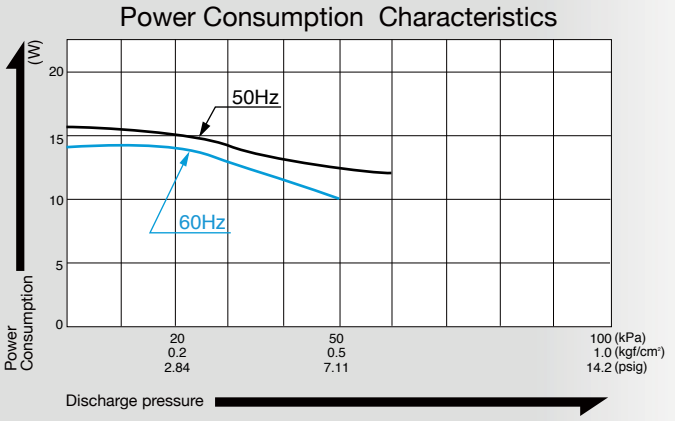

Specifications

Rated Pressure	20 kPa (0.2 kgf/cm²) 0.2 bar 2.84 psig	
Rated Airflow	5 L/min 0.177 cfm	
Maximum Pressure	40 kPa (0.4 kgf/cm²) 0.4 bar 5.69 psig	
Rated Voltage	115 V AC	230 V AC
Power Consumption	14 W	15 W
Rated Frequency	60 Hz	50 Hz
Rated Performance	3,000 hours	
Outlet	6 mm O.D. hose barb	
Duty Cycle	Continuous	
Coil Insulation Class	Class B for UL	
Mounting Dimensions	48 (L) x 62 (W) mm 1-57/64" (L) x 2-7/16" (W)	
Weight	0.7 kg 1.54 Lbs.	
Leadwire Length	200 mm 7-7/8"	

Please read the page of "How to Use This Catalog" first for correct use of compressors and pumps.

Application Examples

Dripping Machine

Blood Pressure Tester

Dimensional Outline Drawing (Unit: mm)

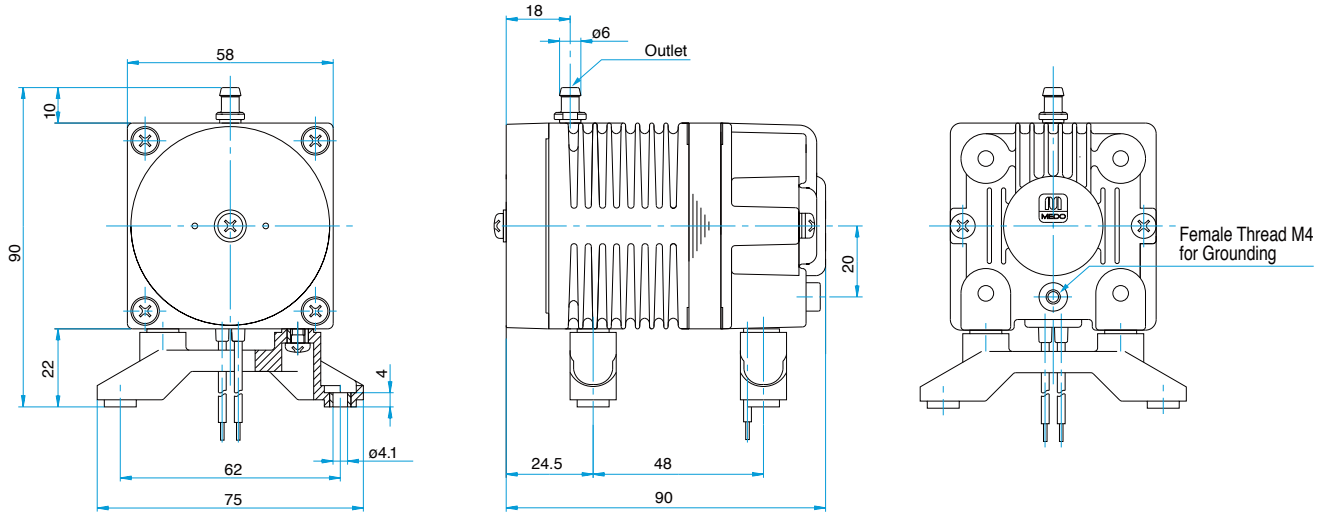

Compressor

Model AC0201A

115V 230V

Airflow & Power Consumption

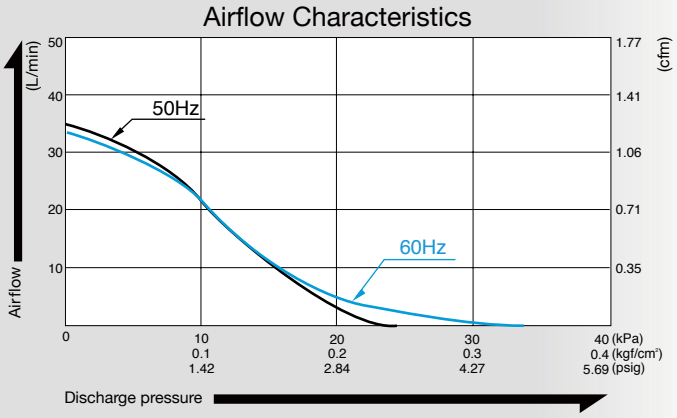

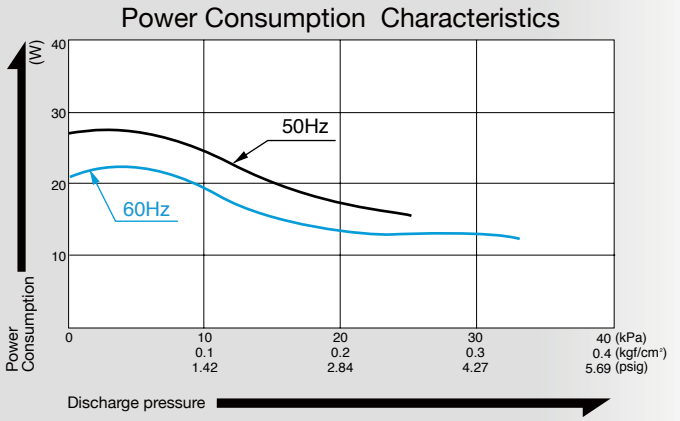

Specifications

Rated Pressure	10 kPa (0.1 kgf/cm²) 0.1 bar 1.42 psig	
Rated Airflow	20 L/min 0.71 cfm	
Maximum Pressure	20 kPa (0.2 kgf/cm²) 0.2 bar 2.84 psig	
Rated Voltage	115 V AC	230 V AC
Power Consumption	19 W	23 W
Rated Frequency	60 Hz	50 Hz
Rated Performance	6,000 hours	
Outlet	ISO Rc 1/4	
Duty Cycle	Continuous	
Coil Insulation Class	E or its equivalent (JETL) and B for UL	
Mounting Dimensions	73 (L) x 88 (W) mm 2-7/8" (L) x 3-15/32" (W)	
Weight	1.5 kg 3.3 Lbs	
Leadwire Length	200 mm 7-7/8"	

Please read the page of "How to Use This Catalog" first for correct use of compressors and pumps.

Application Examples

Seat Lifter

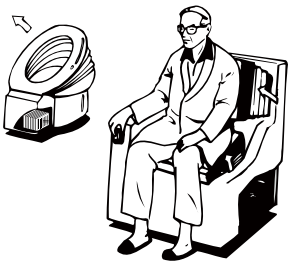

Bed Sore Prevention Mattress

Dimensional Outline Drawing (Unit: mm)

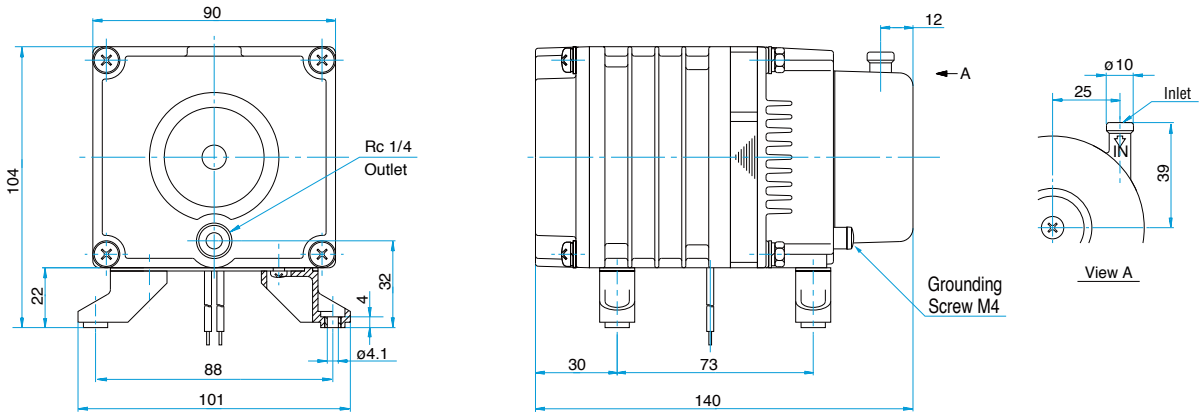

Compressor

Model AC0301A

115V/230V 230V

Airflow & Power Consumption

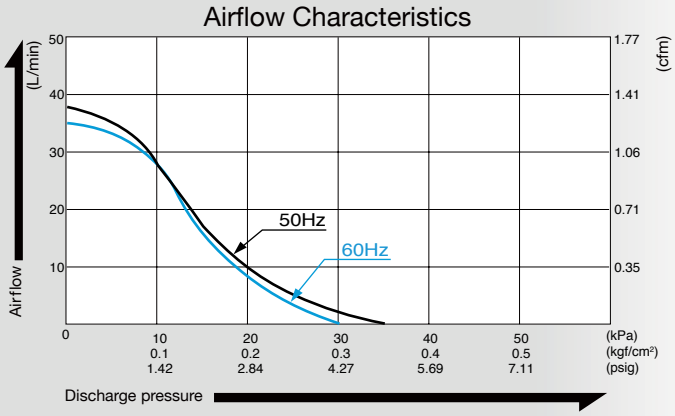

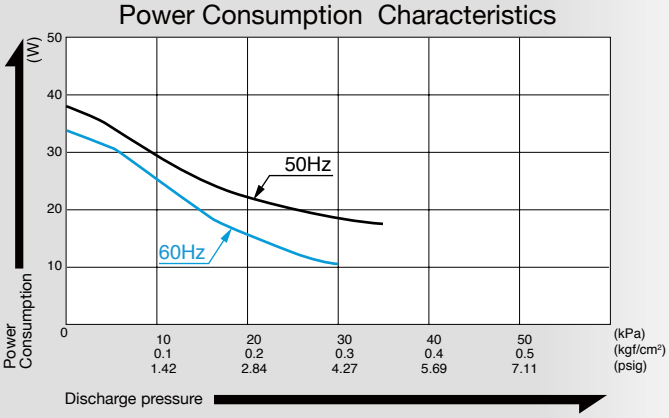

Specifications

Rated Pressure	10 kPa (0.1 kgf/cm²) 0.1 bar 1.42 psig	
Rated Airflow	28 L/min 0.99 cfm	
Maximum Pressure	30 kPa (0.3 kgf/cm²) 0.3 bar 4.27 psig	
Rated Voltage	115 V AC	230 V AC
Power Consumption	25 W	29 W
Rated Frequency	60 Hz	50 Hz
Rated Performance	10,000 hours	
Outlet	ISO Rc 1/4	
Duty Cycle	Continuous	
Coil Insulation Class	E or its equivalent (JETL) and B for UL	
Mounting Dimensions	68 (L) x 84 (W) mm 2-43/64" (L) x 3-5/16" (W)	
Weight	1.9 kg 4.2 Lbs	
Leadwire Length	200 mm 7-7/8"	

Please read the page of "How to Use This Catalog" first for correct use of compressors and pumps.

Application Examples

Liquid Mixer

Seat Lifter

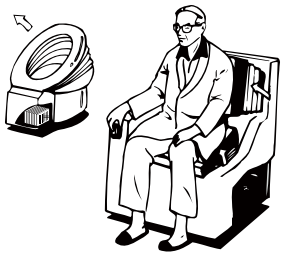

Dimensional Outline Drawing (Unit: mm)

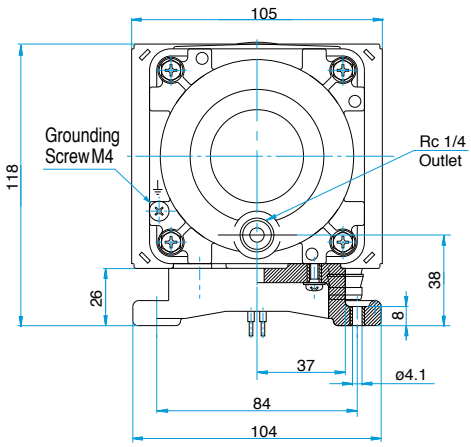

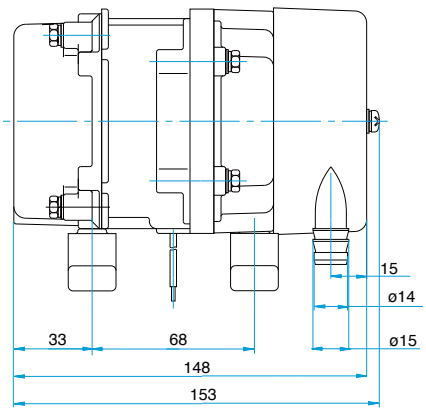

Compressor

Model AC0401A

115V 230V

Airflow & Power Consumption

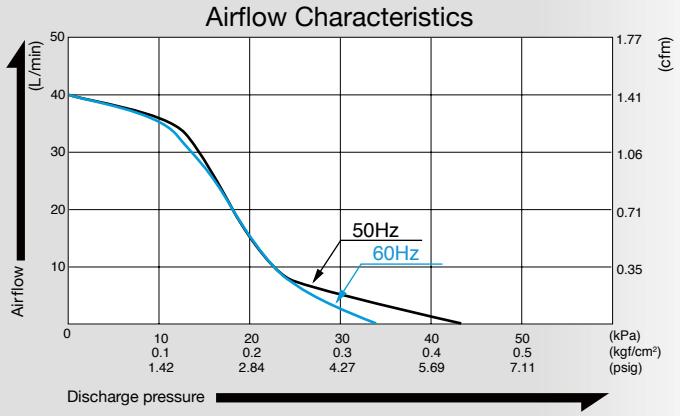

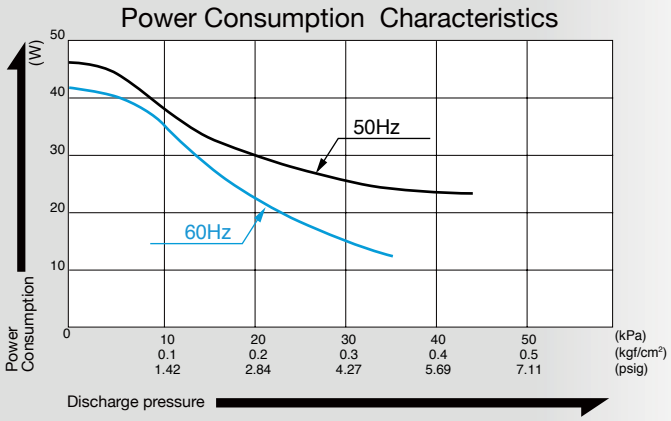

Specifications

Rated Pressure	10 kPa (0.1 kgf/cm²) 0.1 bar 1.42 psig	
Rated Airflow	35 L/min 1.24 cfm	
Maximum Pressure	35 kPa (0.35 kgf/cm²) 0.35 bar 4.98 psig	
Rated Voltage	120 V AC	230 V AC
Power Consumption	35 W	38 W
Rated Frequency	60 Hz	50 Hz
Rated Performance	10,000 hours	
Outlet	ISO Rc 1/4	
Duty Cycle	Continuous	
Coil Insulation Class	E or its equivalent (JETL) and A for UL	
Mounting Dimensions	68 (L) x 84 (W) mm 2-43/64" (L) x 3-5/16" (W)	
Weight	1.9 kg 4.2 Lbs	
Leadwire Length	200 mm 7-7/8"	

Please read the page of "How to Use This Catalog" first for correct use of compressors and pumps.

Application Examples

Liquid Mixer

Air Bearing

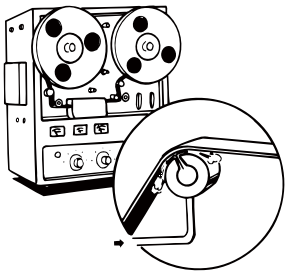

Dimensional Outline Drawing (Unit: mm)

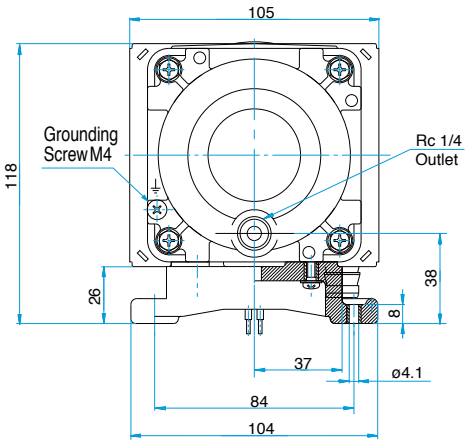

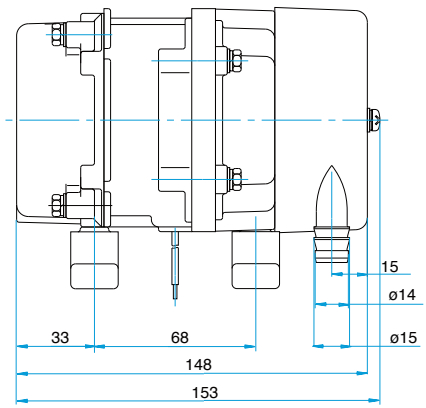

Compressor

Model AC0602

115V 230V

Airflow & Power Consumption

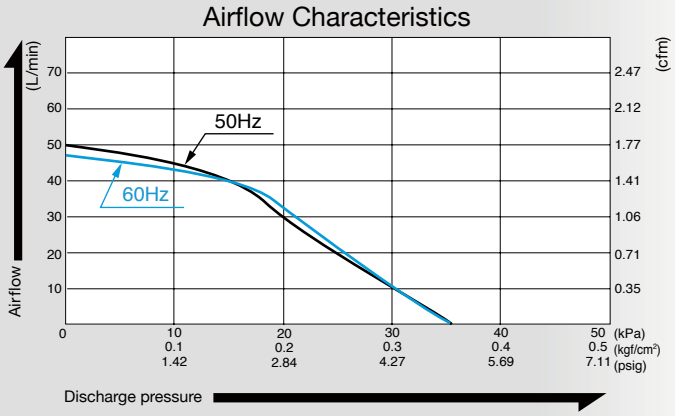

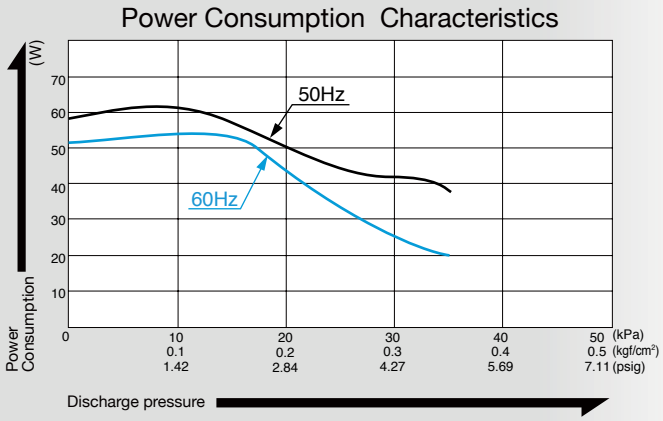

Specifications

Rated Pressure	15 kPa (0.15 kgf/cm²) 0.15 bar 2.13 psig	
Rated Airflow	40 L/min 1.41 cfm	
Maximum Pressure	35 kPa (0.35 kgf/cm²) 0.35 bar 4.98 psig	
Rated Voltage	115 V AC	230 V AC
Power Consumption	52 W	58 W
Rated Frequency	60 Hz	50 Hz
Rated Performance	10,000 hours	
Outlet	ISO Rc 1/4	
Duty Cycle	Continuous	
Coil Insulation Class	E or its equivalent (JETL) and A for UL	
Mounting Dimensions	68 (L) x 84 (W) mm 2-43/64" (L) x 3-5/16" (W)	
Weight	3 kg 6.6 Lbs	
Leadwire Length	235 mm 9-1/4"	350 mm 13-25/32"

Please read the page of "How to Use This Catalog" first for correct use of compressors and pumps.

Application Examples

Air Blaster for Bandsaw

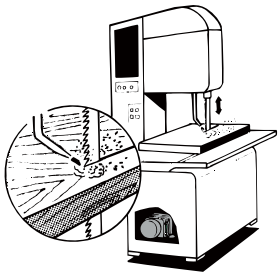

Clean Room Ventilation

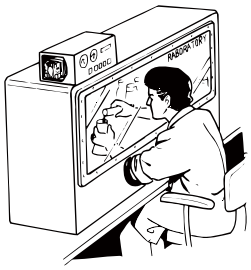

Dimensional Outline Drawing (Unit: mm)

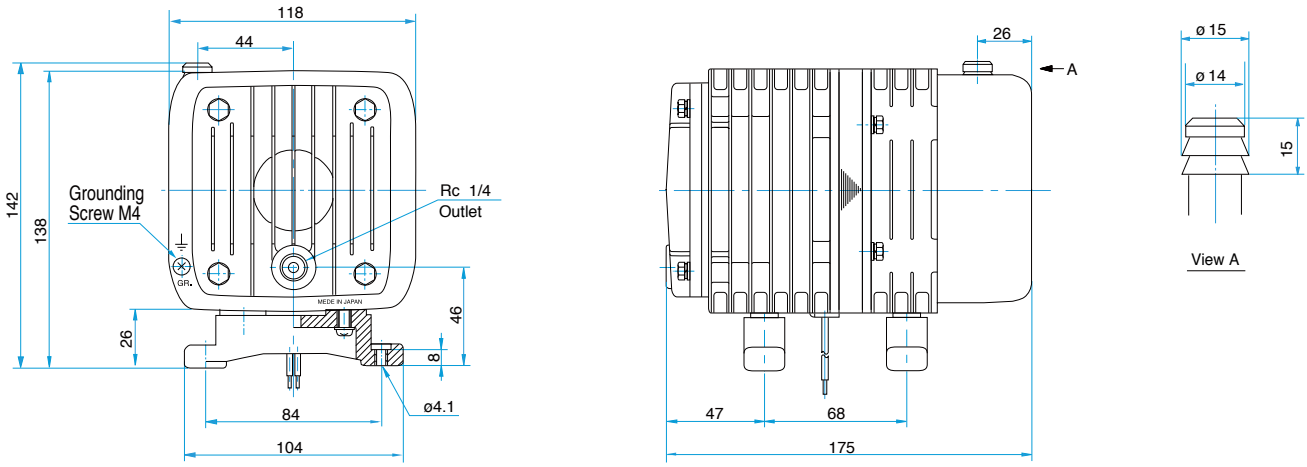

Compressor

Model AC0901

120V/230V 230V

Airflow & Power Consumption

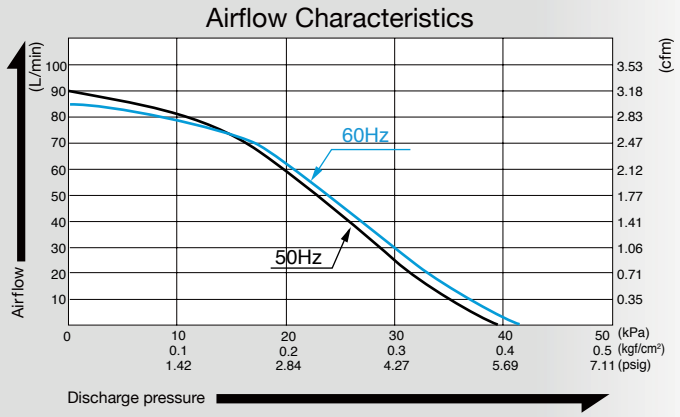

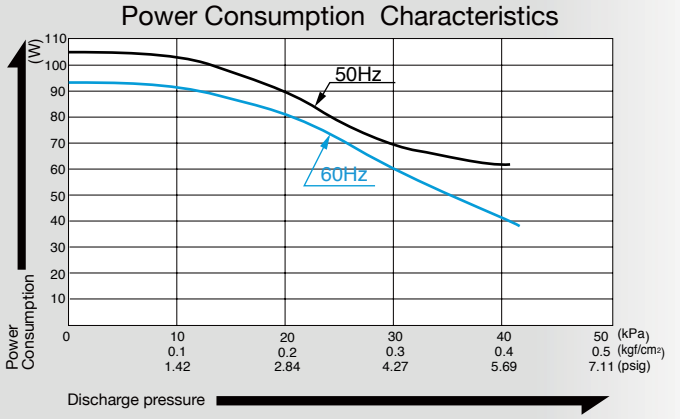

Specifications

Rated Pressure	10 kPa (0.1 kgf/cm²) 0.1 bar 1.42 psig	
Rated Airflow	80 L/min 2.83 cfm	
Maximum Pressure	40 kPa (0.4 kgf/cm²) 0.4 bar 5.69 psig	
Rated Voltage	120 V AC	230 V AC
Power Consumption	88 W	99 W
Rated Frequency	60 Hz	50 Hz
Rated Performance	10,000 hours	
Outlet	ISO Rc 3/8	
Duty Cycle	Continuous	
Coil Insulation Class	E or its equivalent (JETL) and B for UL	
Mounting Dimensions	102 (L) x 130 (W) mm 4-1/64" (L) x 5-1/8" (W)	
Weight	4.9 kg 10.8 Lbs	
Leadwire Length	300 mm 11-13/16"	

Please read the page of "How to Use This Catalog" first for correct use of compressors and pumps.

Application Examples

Air Lifter for Bathtub

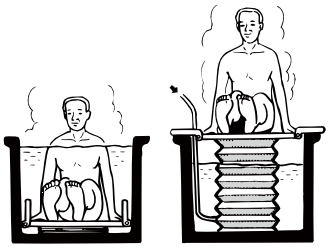

Liquid Dispenser

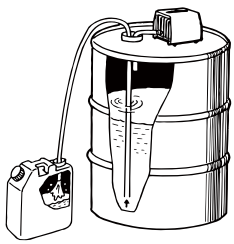

Dimensional Outline Drawing (Unit: mm)

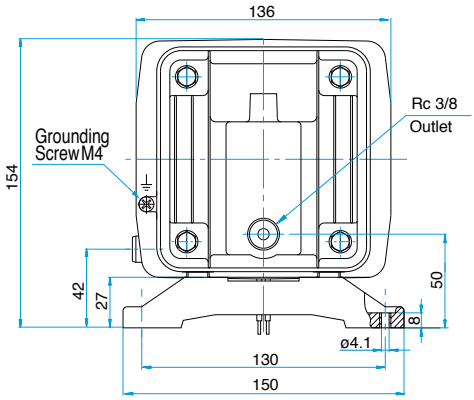

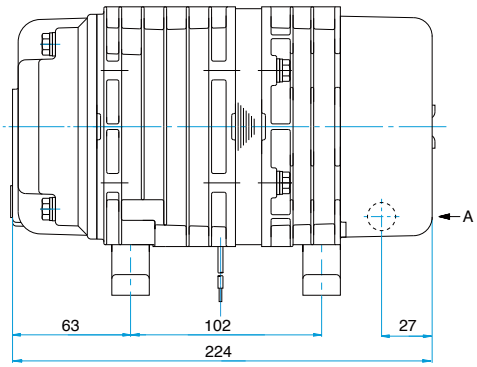

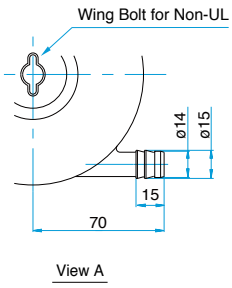

Compressor

Model AC0902

115V 230V

Airflow & Power Consumption

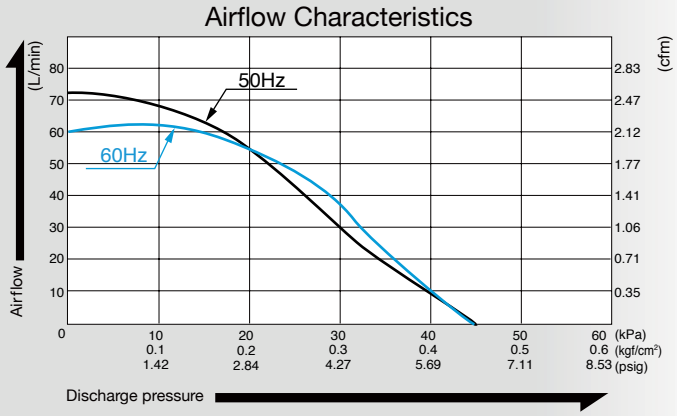

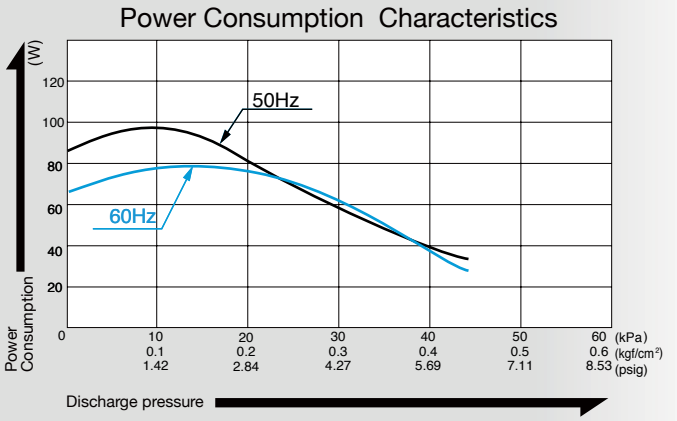

Specifications

Rated Pressure	20 kPa (0.2 kgf/cm²) 0.2 bar 2.84 psig	
Rated Airflow	55 L/min 1.94 cfm	
Maximum Pressure	45 kPa (0.45 kgf/cm²) 0.45 bar 6.4 psig	
Rated Voltage	115 V AC	230 V AC
Power Consumption	75 W	85 W
Rated Frequency	60 Hz	50 Hz
Rated Performance	10,000 hours	
Outlet	ISO Rc 3/8	
Duty Cycle	Continuous	
Coil Insulation Class	E or its equivalent (JETL) and B for UL	
Mounting Dimensions	102 (L) x 130 (W) mm 4-1/64" (L) x 5-1/8" (W)	
Weight	4.9 kg 10.8 Lbs	
Leadwire Length	300 mm 11-13/16"	320 mm 12-19/32"

Please read the page of "How to Use This Catalog" first for correct use of compressors and pumps.

Application Examples

Air Lifter for Bathtub

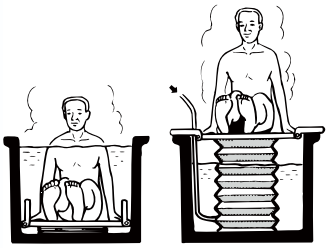

Liquid Dispenser

Dimensional Outline Drawing (Unit: mm)

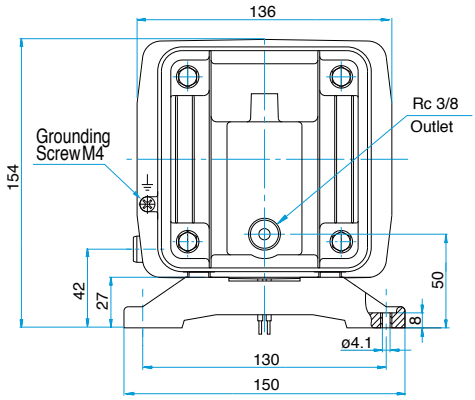

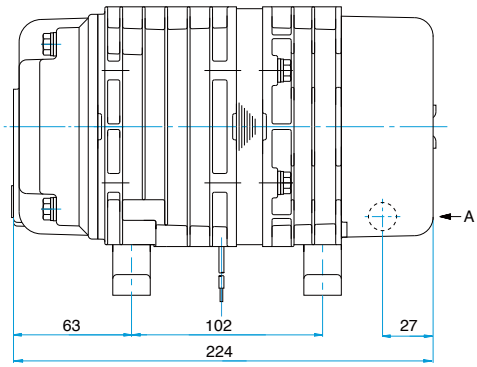

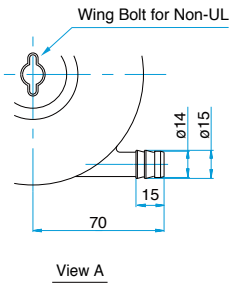

Compressor

Model AC0105

115V/230V 230V

Airflow & Power Consumption

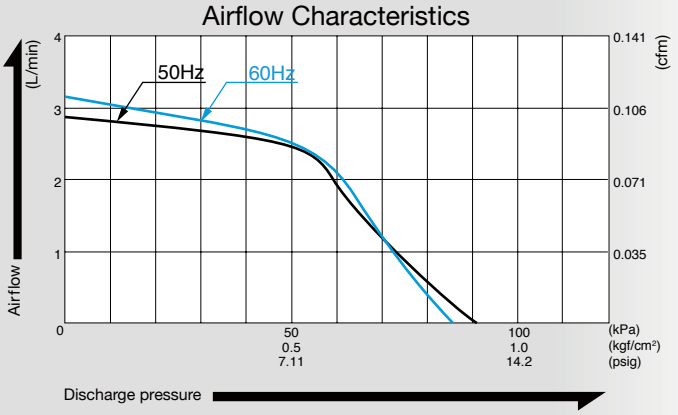

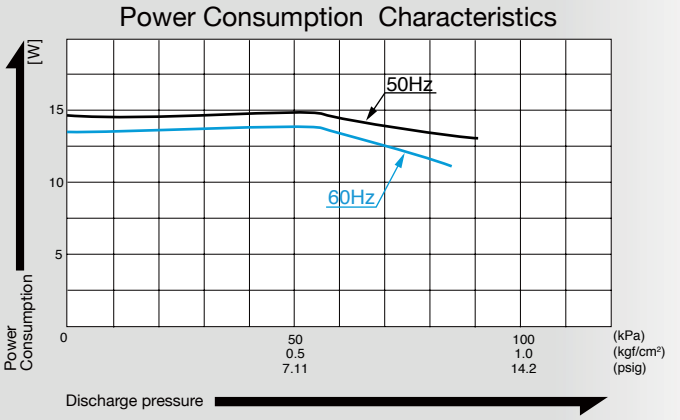

Specifications

Rated Pressure	50 kPa (0.5 kgf/cm²) 0.5 bar 7.11 psig	
Rated Airflow	2.5 L/min 0.088 cfm	
Maximum Pressure	80 kPa (0.8 kgf/cm²) 0.8 bar 11.4 psig	
Rated Voltage	115 V AC	230 V AC
Power Consumption	14 W	15 W
Rated Frequency	60 Hz	50 Hz
Rated Performance	3,000 hours	
Outlet	6 mm O.D. hose barb	
Duty Cycle	60 minutes	
Coil Insulation Class	E or its equivalent (JETL) and B for UL	
Mounting Dimensions	48 (L) x 62 (W) mm 1-57/64" (L) x 2-7/16" (W)	
Weight	0.7 kg 1.54 Lbs	
Leadwire Length	200 mm 7-7/8"	

Please read the page of "How to Use This Catalog" first for correct use of compressors and pumps.

Application Examples

Saline Water Splasher

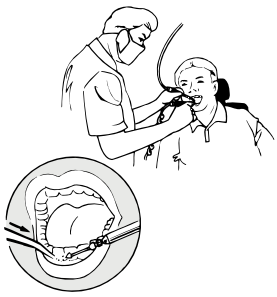

Copy Paper Separator

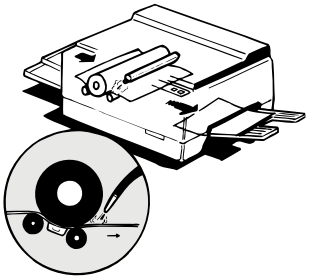

Dimensional Outline Drawing (Unit: mm)

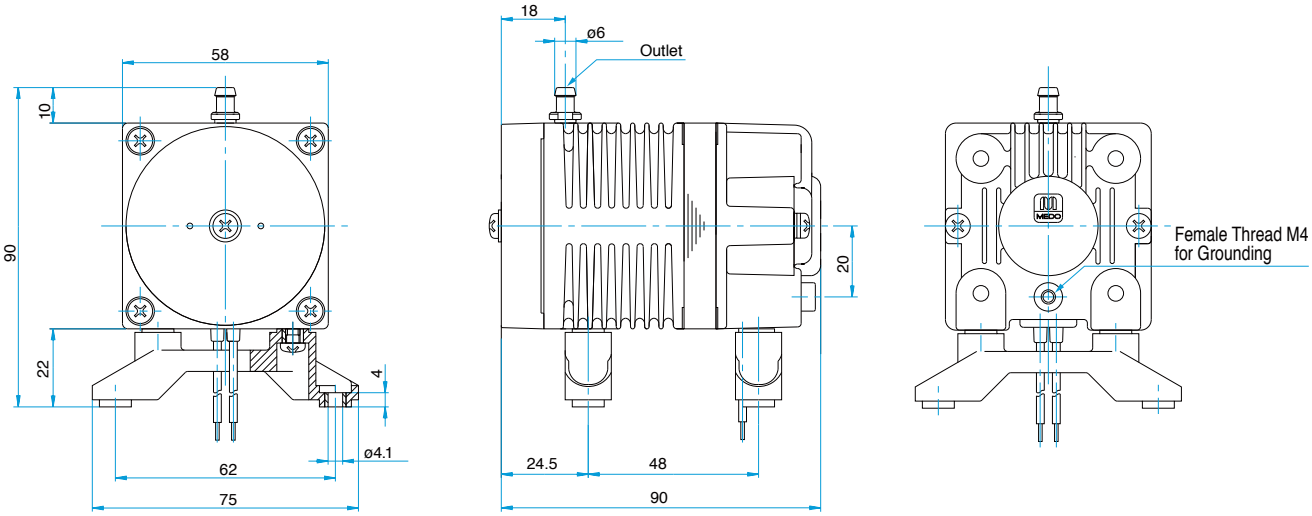

Compressor

Model AC0110

115V 230V

Airflow & Power Consumption

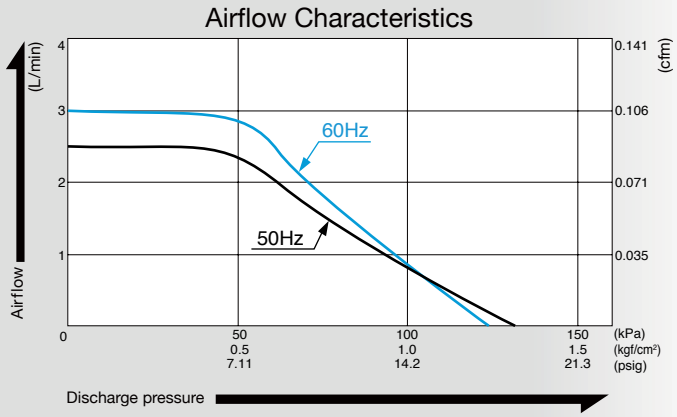

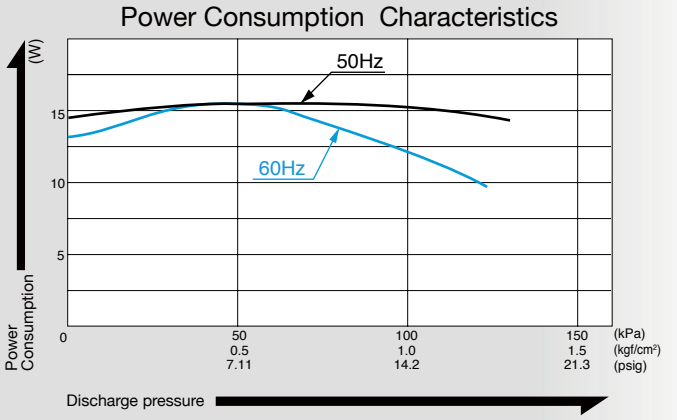

Specifications

Rated Pressure	100 kPa (1.0 kgf/cm²) 1.0 bar 14.2 psig	
Rated Airflow	0.8 L/min 0.028 cfm	
Maximum Pressure	120 kPa (1.2 kgf/cm²) 1.2 bar 17.1 psig	
Rated Voltage	115 V AC	230 V AC
Power Consumption	12 W	15 W
Rated Frequency	60 Hz	50 Hz
Rated Performance	3,000 hours	
Outlet	6 mm O.D. hose barb	
Duty Cycle	30 minutes	
Coil Insulation Class	E or its equivalent (JETL) and B for UL	
Mounting Dimensions	48 (L) x 62 (W) mm 1-57/64" (L) x 2-7/16" (W)	
Weight	0.7 kg 1.54 Lbs	
Leadwire Length	200 mm 7-7/8"	

Please read the page of "How to Use This Catalog" first for correct use of compressors and pumps.

Application Examples

Automatic Dispenser

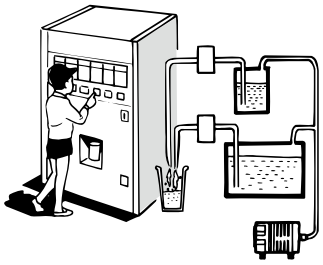

Dimensional Outline Drawing (Unit: mm)

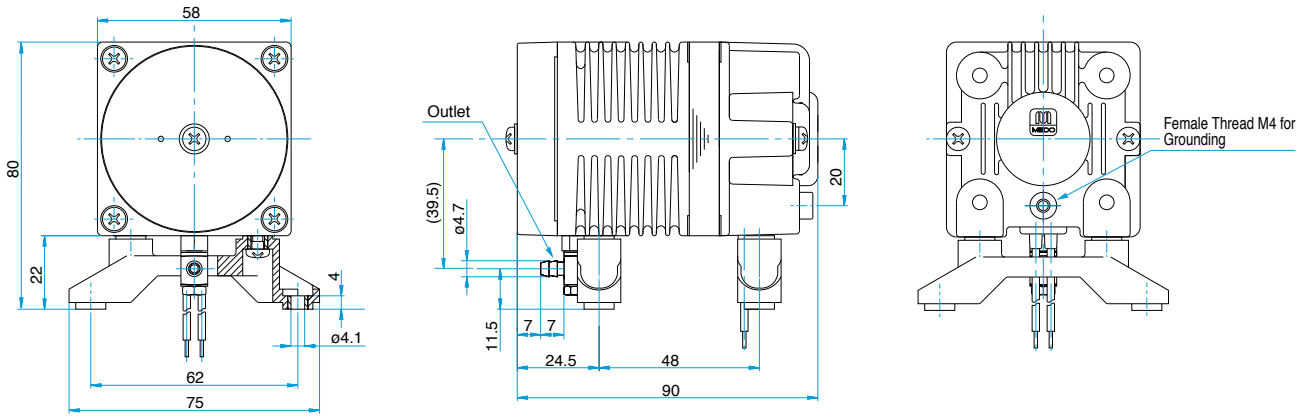

Compressor

Model AC0207

115V 230V

Airflow & Power Consumption

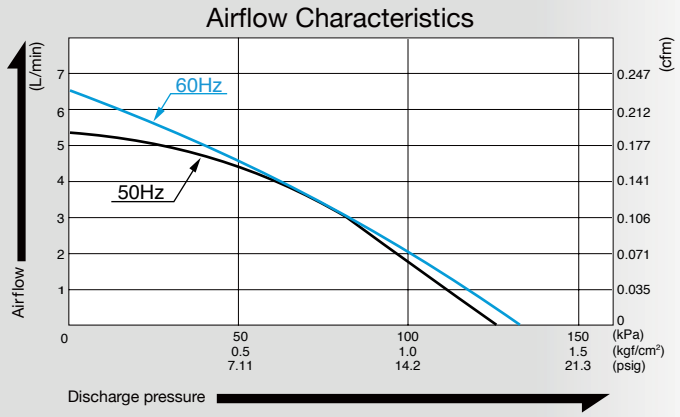

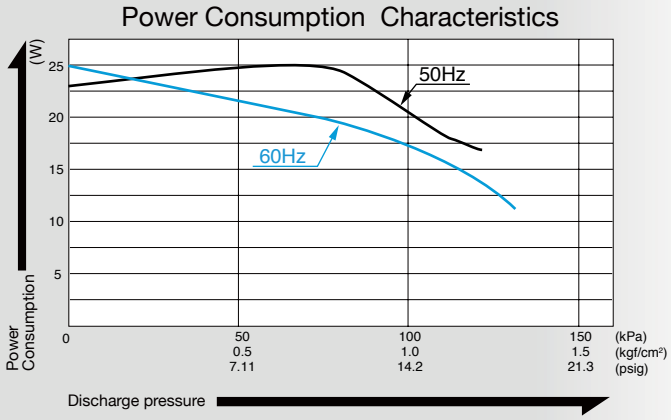

Specifications

Rated Pressure	70 kPa (0.7 kgf/cm²) 0.7 bar 9.96 psig	
Rated Airflow	3.5 L/min 0.124 cfm	
Maximum Pressure	100 kPa (1.0 kgf/cm²) 1.0 bar 14.2 psig	
Rated Voltage	115 V AC	230 V AC
Power Consumption	20 W	25 W
Rated Frequency	60 Hz	50 Hz
Rated Performance	3,000 hours	
Outlet	4.7 mm O.D. hose barb	
Duty Cycle	Continuous	
Coil Insulation Class	E or its equivalent (JETL) and B for UL	
Mounting Dimensions	75 (L) x 88 (W) mm 2-61/64" (L) x 3-15/32" (W)	
Weight	1.7 kg 3.7 Lbs	
Leadwire Length	200 mm 7-7/8"	

Please read the page of "How to Use This Catalog" first for correct use of compressors and pumps.

Application Examples

Air Bearing for Precision Machines

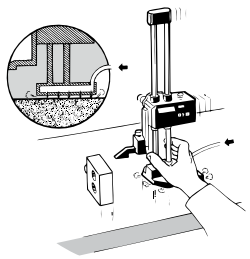

Nebulizer

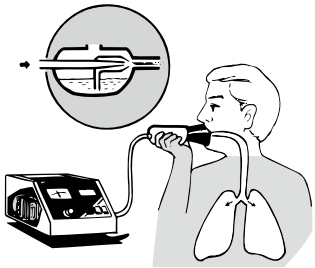

Dimensional Outline Drawing (Unit: mm)

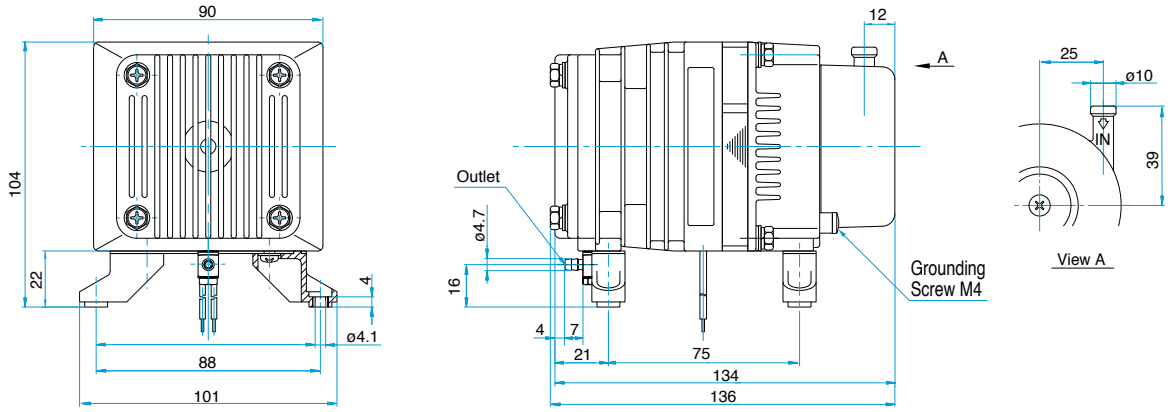

Compressor

Model AC0410A

CE 230V

Airflow & Power Consumption

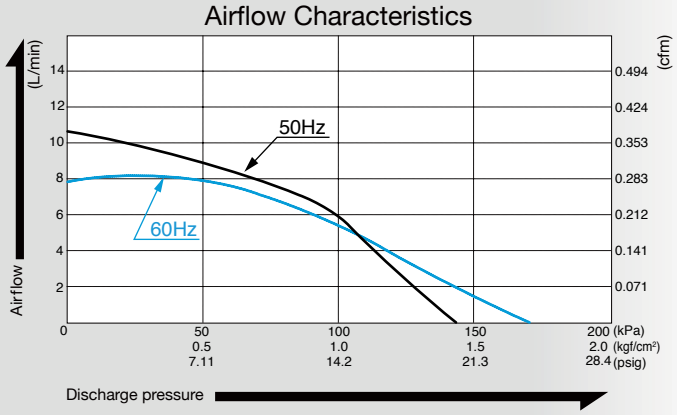

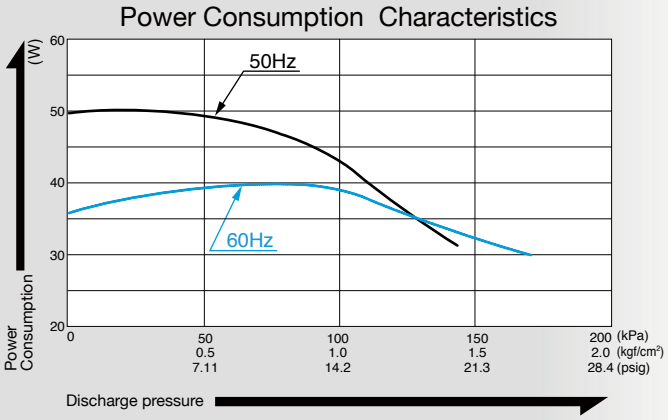

Specifications

Rated Pressure	100 kPa (1.0 kgf/cm²) 1.0 bar 14.2 psig	
Rated Airflow	5 L/min 0.177 cfm	
Maximum Pressure	130 kPa (1.3 kgf/cm²) 1.3 bar 18.5 psig	
Rated Voltage	115 V AC	230 V AC
Power Consumption	39 W	43 W
Rated Frequency	60 Hz	50 Hz
Rated Performance	3,000 hours	
Outlet	ISO Rc 1/4	
Duty Cycle	Continuous	
Coil Insulation Class	B or its equivalent (JETL)	
Mounting Dimensions	68 (L) x 98 (W) mm 2-43/64" (L) x 3-55/64" (W)	
Weight	2.1 kg 4.6 Lbs	
Leadwire Length	220 mm 8-21/32"	170 mm 6-11/16"

Please read the page of "How to Use This Catalog" first for correct use of compressors and pumps.

Application Examples

Industrial Sewing Machine

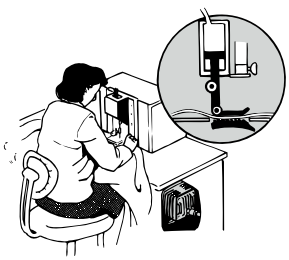

Various Aerosol Sprays

Dimensional Outline Drawing (Unit: mm)

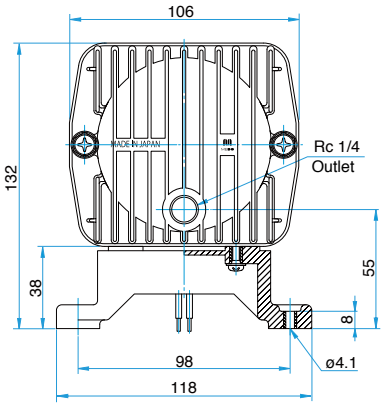

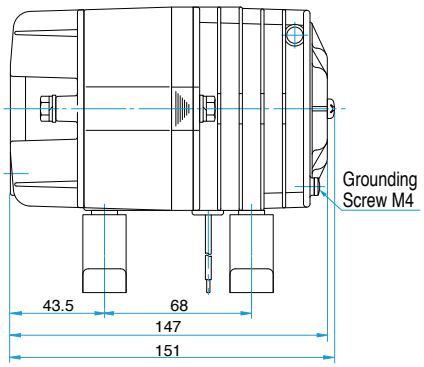

Compressor

Model AC0610A

115V 230V

Airflow & Power Consumption

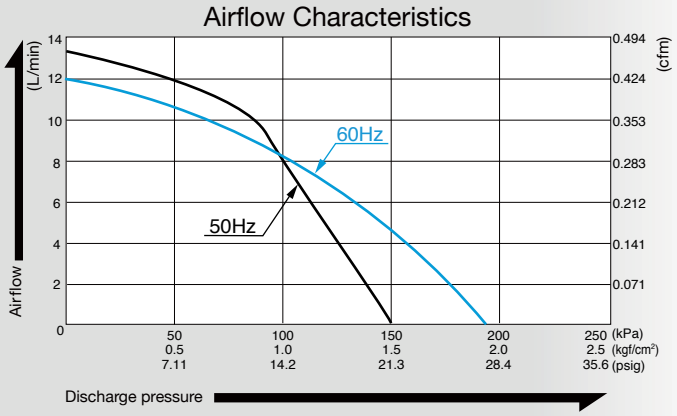

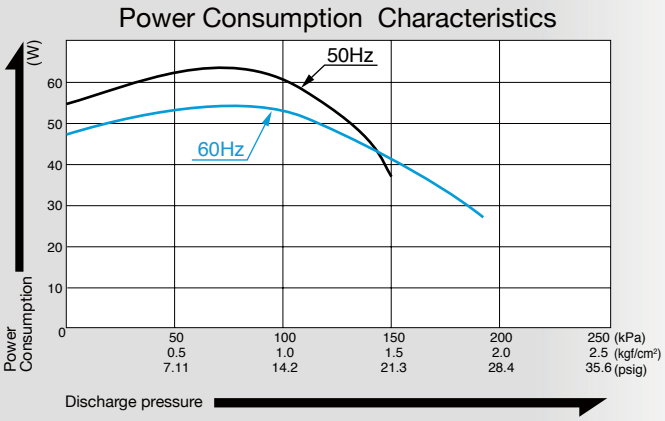

Specifications

Rated Pressure	100 kPa (1.0 kgf/cm²) 1.0 bar 14.2 psig	
Rated Airflow	8 L/min 0.283 cfm	
Maximum Pressure	150 kPa (1.5 kgf/cm²) 1.5 bar 21.3 psig	
Rated Voltage	115 V AC	230 V AC
Power Consumption	52 W	60 W
Rated Frequency	60 Hz	50 Hz
Rated Performance	10,000 hours	
Outlet	ISO Rc 1/4	
Duty Cycle	Continuous	
Coil Insulation Class	F or its equivalent (JETL)	
Mounting Dimensions	68 (L) x 98 (W) mm 2-43/64" (L) x 3-5/16" (W)	
Weight	3.2 kg 7.1 Lbs	
Leadwire Length	200 mm 7-7/8"	

Please read the page of "How to Use This Catalog" first for correct use of compressors and pumps.

Application Examples

Dispenser

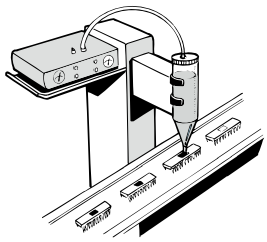

Automatic Stamper

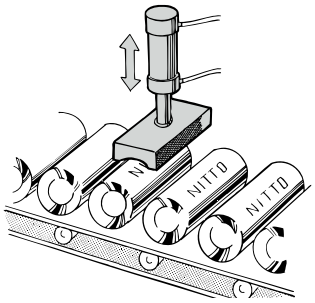

Dimensional Outline Drawing (Unit: mm)

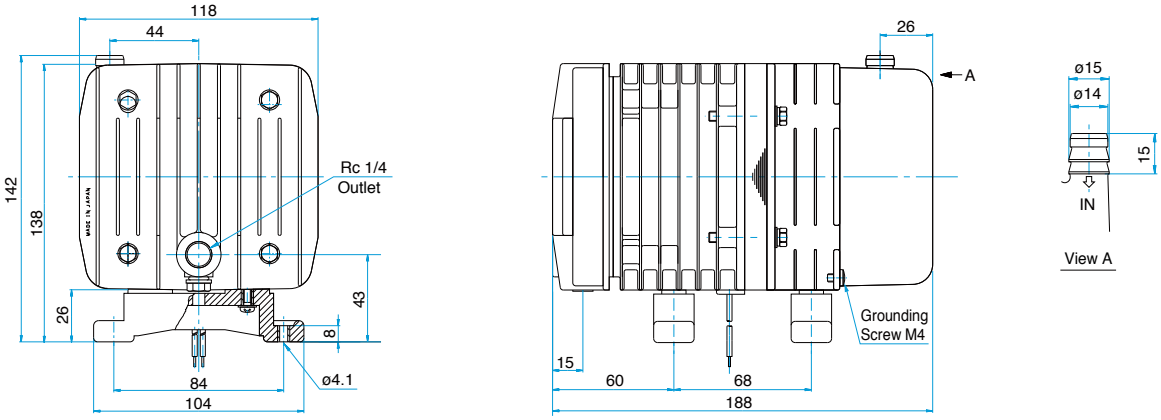

Compressor

Model AC0910

115V/230V 230V

Airflow & Power Consumption

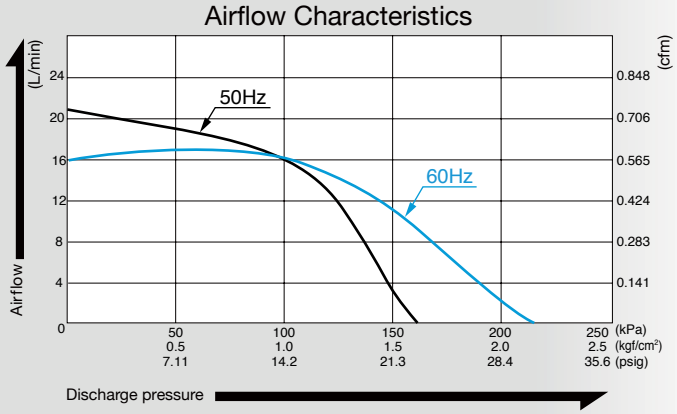

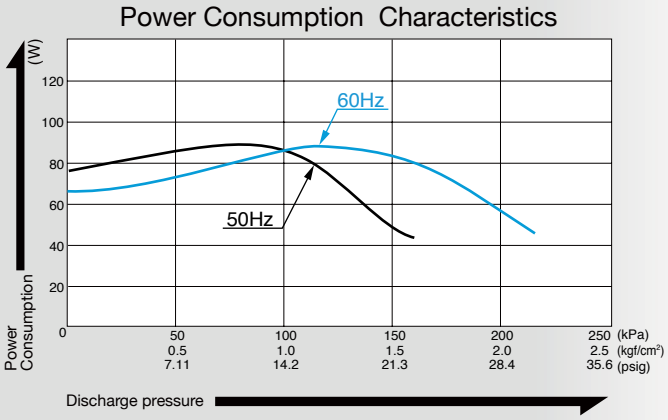

Specifications

Rated Pressure	100 kPa (1.0 kgf/cm²) 1.0 bar 14.2 psig	
Rated Airflow	16 L/min 0.57 cfm	
Maximum Pressure	150 kPa (1.5 kgf/cm²) 1.5 bar 21.3 psig	
Rated Voltage	115 V AC	230 V AC
Power Consumption	85 W	90 W
Rated Frequency	60 Hz	50 Hz
Rated Performance	3,000 hours	
Outlet	ISO Rc 1/4	
Duty Cycle	Continuous	
Coil Insulation Class	E or its equivalent (JETL) or B for UL	
Mounting Dimensions	102 (L) x 130 (W) mm 4-1/64" (L) x 5-1/8" (W)	
Weight	4.9 kg 10.8 Lbs	
Leadwire Length	300 mm 11-13/16"	320 mm 12-19/32"

Please read the page of "How to Use This Catalog" first for correct use of compressors and pumps.

Application Examples

Sealant gun

Leakage Tester

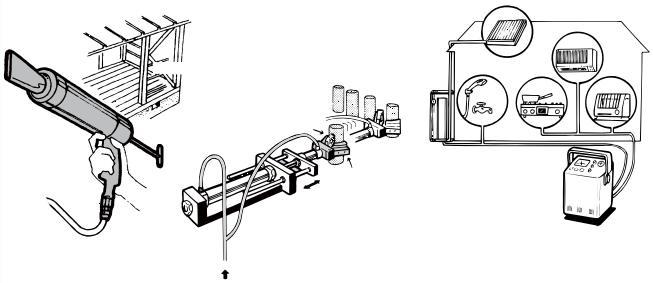

Air Cylinder/Chuck Driver

Dimensional Outline Drawing (Unit: mm)

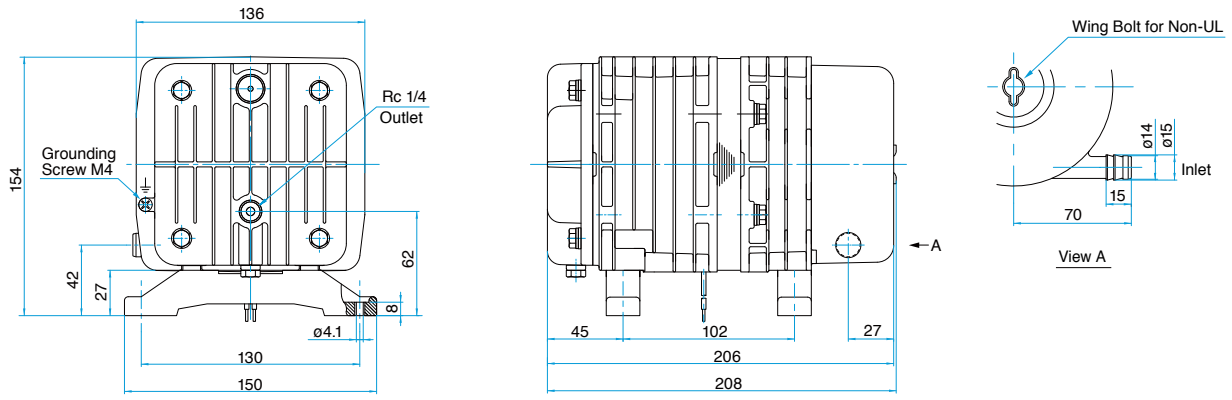

Compressor

Model AC0920

115V (60Hz) 230V (50Hz)

Airflow & Power Consumption

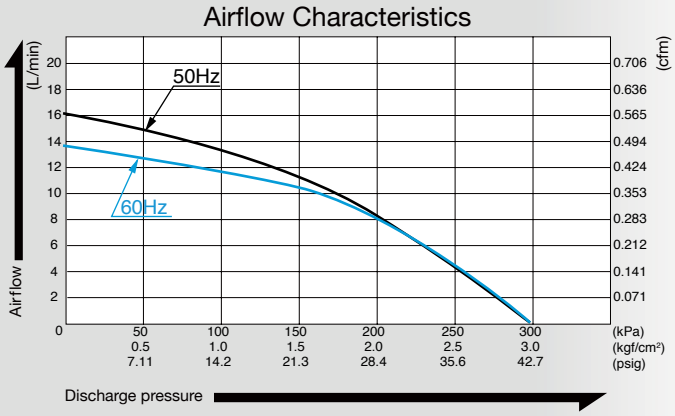

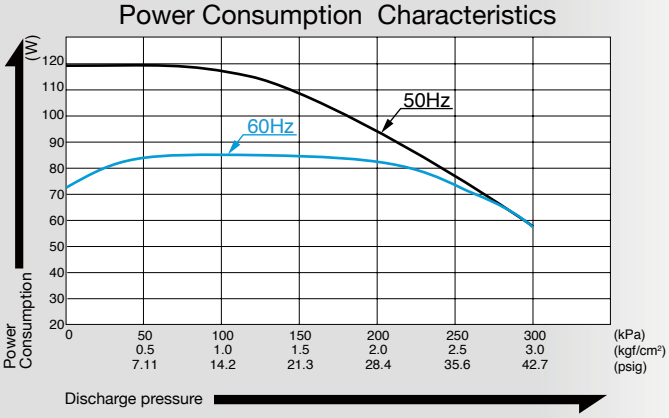

Specifications

Rated Pressure	200 kPa (2.0 kgf/cm²) 2.0 bar 28.4 psig	
Rated Airflow	8 L/min 0.283 cfm	
Maximum Pressure	300 kPa (3.0 kgf/cm²) 3.0 bar 42.7 psig	
Rated Voltage	115 V AC	230 V AC
Power Consumption	81 W	100 W
Rated Frequency	60 Hz	50 Hz
Rated Performance	3,000 hours	
Outlet	ISO Rc 1/4	
Duty Cycle	30 minutes	
Coil Insulation Class	E or its equivalent (JETL)	
Mounting Dimensions	102 (L) x 130 (W) mm 4-1/64" (L) x 5-1/8" (W)	
Weight	5 kg 11 Lbs	
Leadwire Length	300 mm 11-13/16"	150 mm 5-29/32"

Please read the page of "How to Use This Catalog" first for correct use of compressors and pumps.

Application Examples

Air Cylinder/Chuck Driver

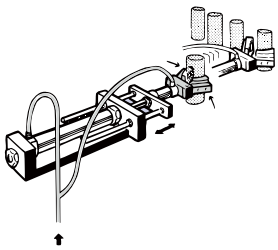

Leakage Tester

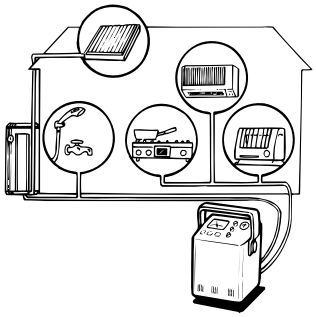

Dimensional Outline Drawing (Unit: mm)

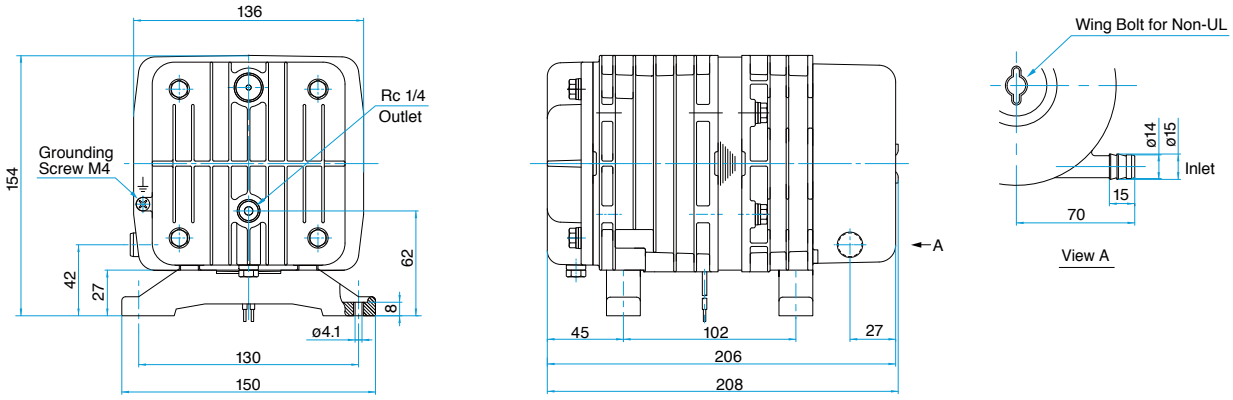

VACUUM PUMP

AC LINEAR

Free Piston Vacuum Pump

Page

Vacuum Pump

Model VP0125

115V/230V 230V

Airflow & Power Consumption

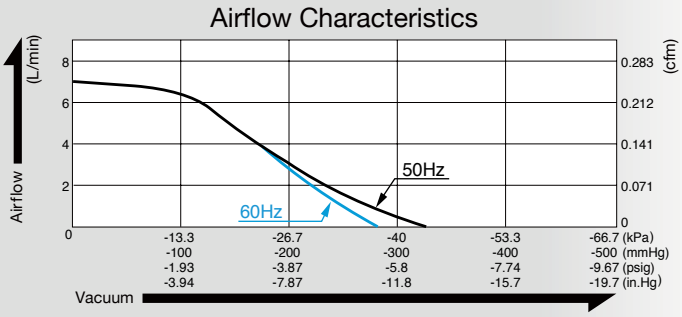

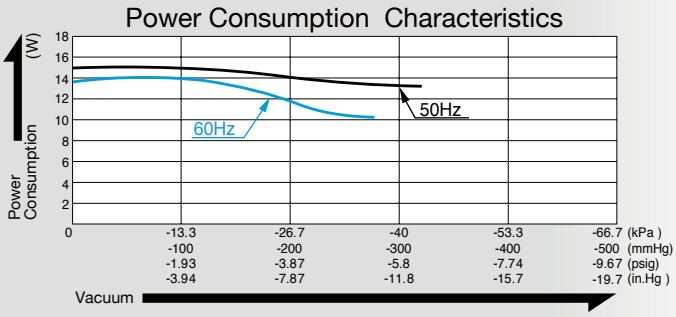

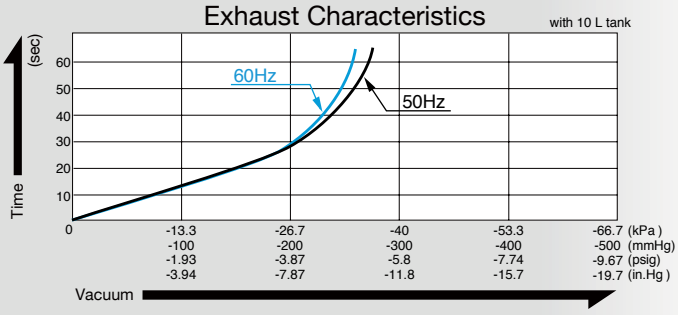

Specifications

Attainable Vacuum	-33.3 kPa (-250 mmHg) -333 mbar -9.84 in. Hg	
Free Air Displacement	7 L/min 0.247 cfm	
Rated Voltage	115 V AC	230 V AC
Power Consumption	14 W	15 W
Rated Frequency	60 Hz	50 Hz
Rated Performance	3,000 hours	
Inlet	6 mm O.D. hose barb	
Outlet	6 mm O.D. hose barb	
Duty Cycle	Continuous	
Coil Insulation Class	Class B for UL	
Mounting Dimensions	48 (L) x 62 (W) mm 1-57/64" (L) x 2-7/16" (W)	
Weight	0.7 kg 1.54 Lbs	
Leadwire Length	200 mm 7-7/8"	

Please read the page of "How to Use This Catalog" first for correct use of compressors and pumps.

Application Examples

Dripping Machine

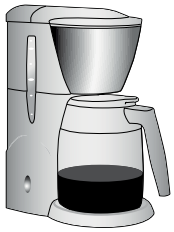

Paper Card Dispenser

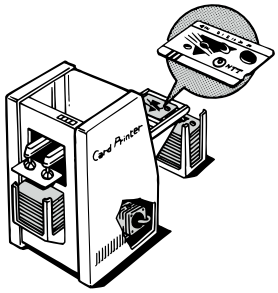

Dimensional Outline Drawing (Unit: mm)

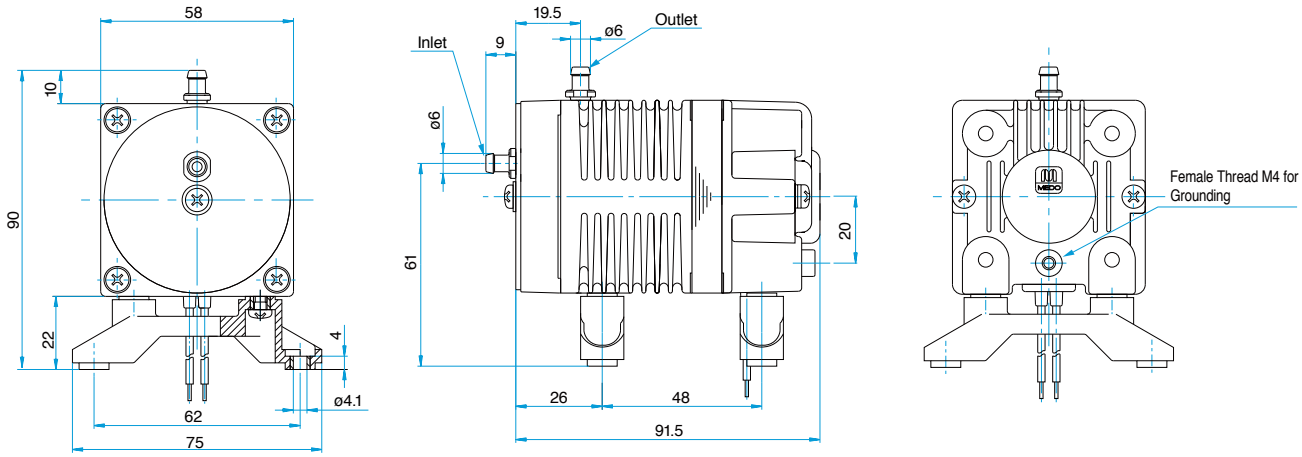

Vacuum Pump

Model VP0140

115V 230V

Airflow & Power Consumption

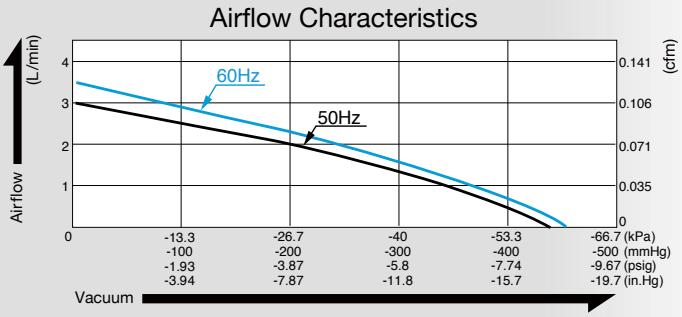

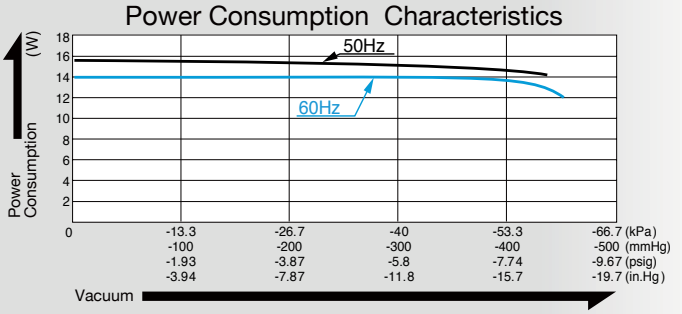

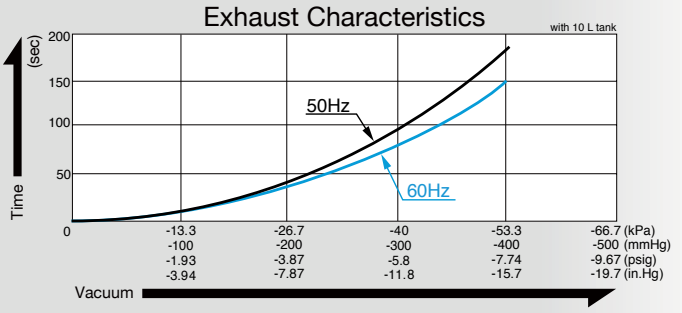

Specifications

Attainable Vacuum	-53.3 kPa (-400 mmHg) -533 mbar -15.7 in. Hg	
Free Air Displacement	3 L/min 0.106 cfm	
Rated Voltage	115 V AC	230 V AC
Power Consumption	14 W	15 W
Rated Frequency	60 Hz	50 Hz
Rated Performance	3,000 hours	
Inlet	6 mm O.D. hose barb	
Outlet	6 mm O.D. hose barb	
Duty Cycle	60 minutes	
Coil Insulation Class	E or its equivalent (JETL) and B for UL	
Mounting Dimensions	48 (L) x 62 (W) mm 1-57/64" (L) x 2-7/16" (W)	
Weight	0.7 kg 1.54 Lbs	
Leadwire Length	200 mm 7-7/8"	

Please read the page of "How to Use This Catalog" first for correct use of compressors and pumps.

Application Examples

Dripping Machine

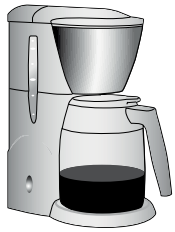

Paper Card Dispenser

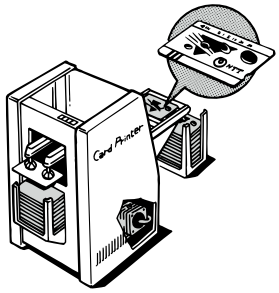

Dimensional Outline Drawing (Unit: mm)

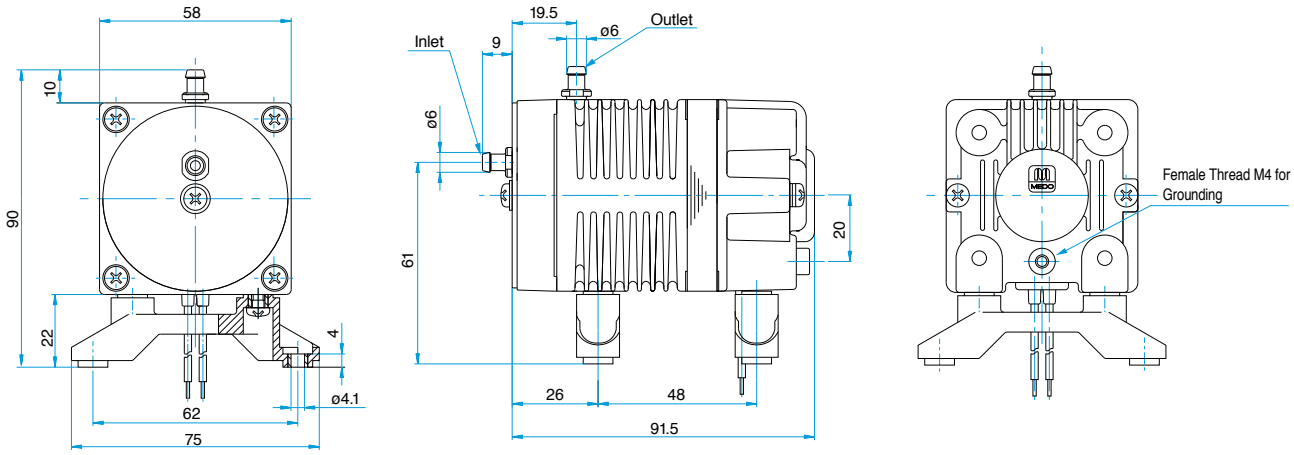

Vacuum Pump

Model VP0435A

115V 230V

Airflow & Power Consumption

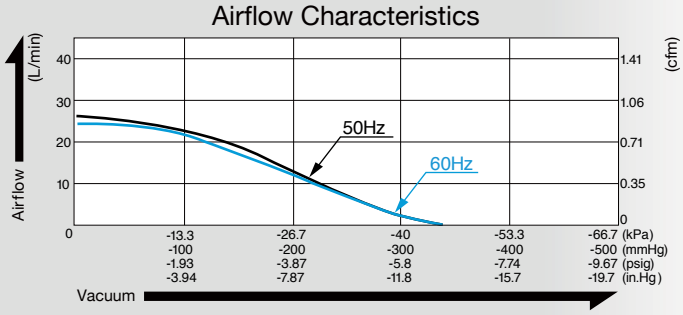

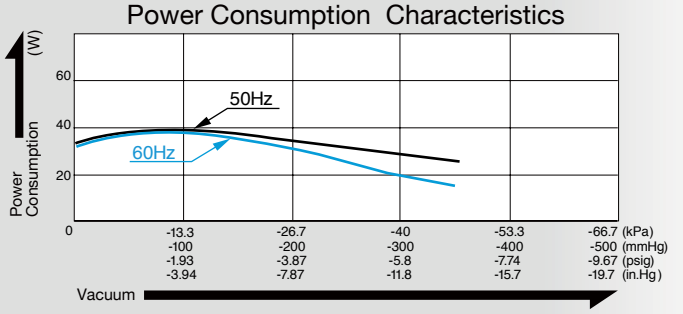

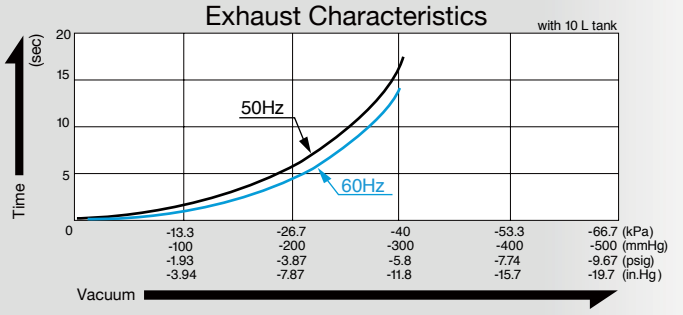

Specifications

Attainable Vacuum	-46.7 kPa (-350 mmHg) -467 mbar -13.8 in. Hg	
Free Air Displacement	25 L/min 0.88 cfm	
Rated Voltage	115 V AC	230 V AC
Power Consumption	39 W	
Rated Frequency	60 Hz	50 Hz
Rated Performance	3,000 hours	
Inlet	15mm O.D. hose barb	
Outlet	ISO Rc 1/4	
Duty Cycle	Continuous	
Coil Insulation Class	B or its equivalent (JETL) and B for UL	
Mounting Dimensions	68 (L) x 84 (W) mm 2-43/64" (L) x 3-5/16" (W)	
Weight	2.3 kg 5.1 Lbs	
Leadwire Length	300 mm 11-13/16"	550 mm 21-21/32"

Please read the page of "How to Use This Catalog" first for correct use of compressors and pumps.

Application Examples

Machine Screw Feeder

Air Sampler

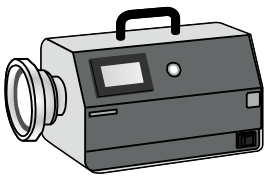

Dimensional Outline Drawing (Unit: mm)

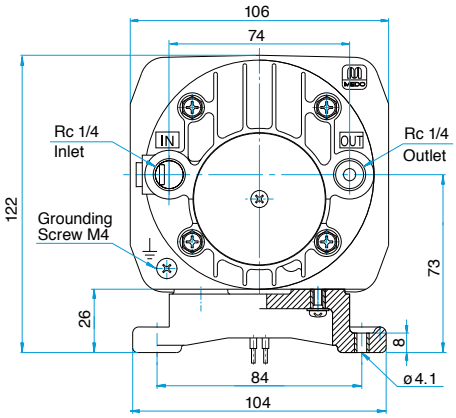

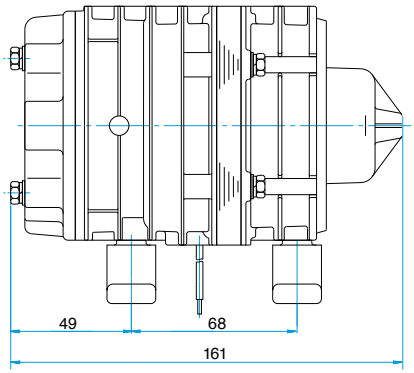

Vacuum Pump

Model VP0450

120V 230V

Airflow & Power Consumption

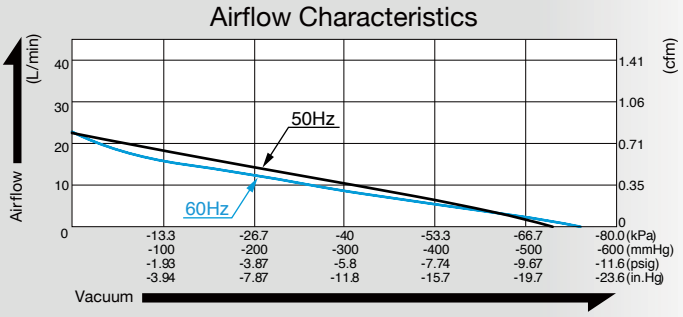

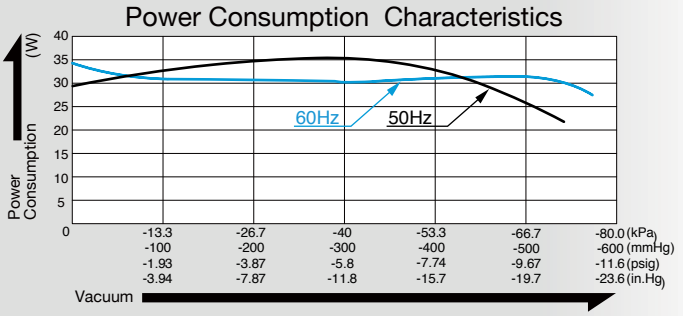

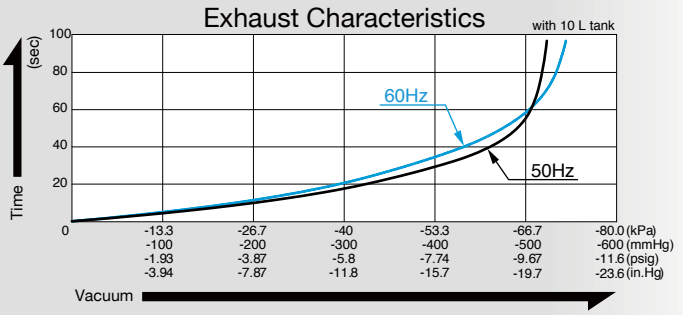

Specifications

Attainable Vacuum	-66.7 kPa (-500 mmHg) -667 mbar -19.7 in. Hg	
Free Air Displacement	18 L/min 0.64 cfm	
Rated Voltage	120 V AC	230 V AC
Power Consumption	34 W	35 W
Rated Frequency	60 Hz	50 Hz
Rated Performance	10,000 hours	
Inlet	ISO Rc 1/4	
Outlet	ISO Rc 1/4	
Duty Cycle	Continuous	
Coil Insulation Class	E or its equivalent (JETL) and A for UL	
Mounting Dimensions	85 (L) x 88 (W) mm 3-11/32" (L) x 3-15/32" (W)	
Weight	2.2 kg 4.9 Lbs	
Leadwire Length	300 mm 11-13/16"	

Please read the page of "How to Use This Catalog" first for correct use of compressors and pumps.

Application Examples

Machine Screw Feeder

Air Sampler

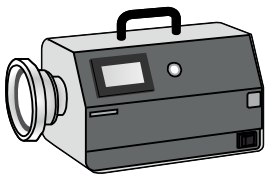

Dimensional Outline Drawing (Unit: mm)

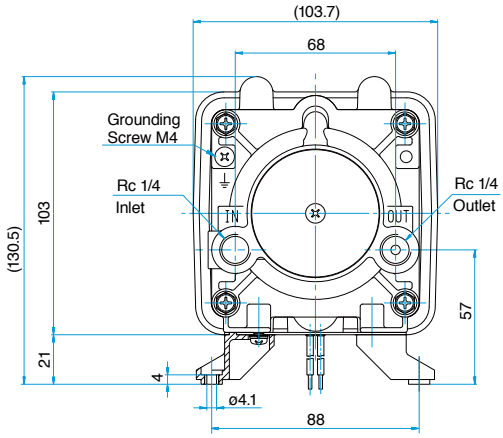

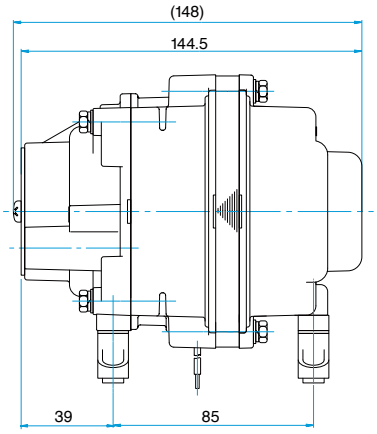

Vacuum Pump

Model VP0625

115V/230V 230V

Airflow & Power Consumption

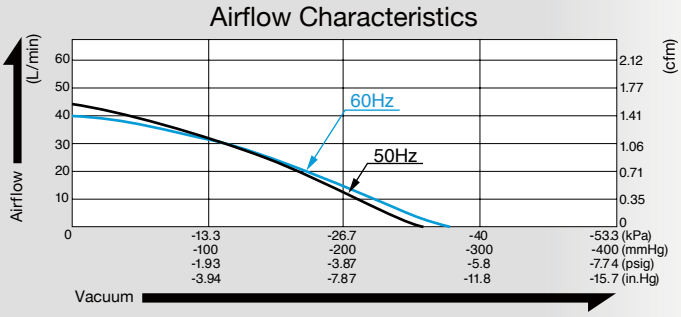

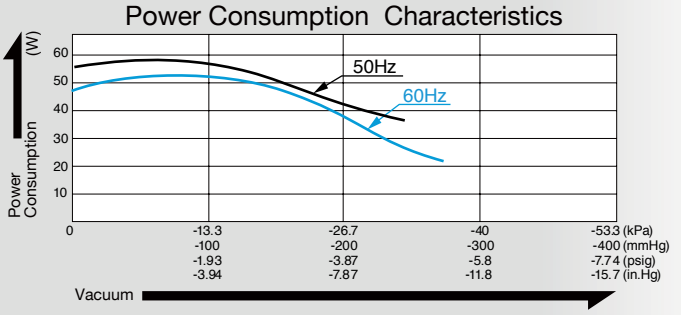

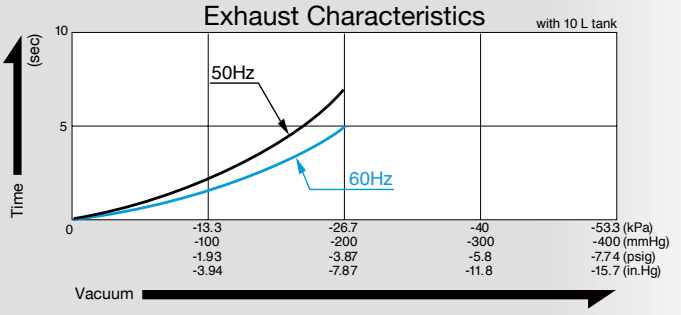

Specifications

Attainable Vacuum	-33.3 kPa (-250 mmHg) -333 mbar -9.84 in. Hg	
Free Air Displacement	40 L/min 1.41 cfm	
Rated Voltage	115 V AC	230 V AC
Power Consumption	60 W	
Rated Frequency	60 Hz	50 Hz
Rated Performance	10,000 hours	
Inlet	15mm O.D. hose barb	
Outlet	ISO Rc 1/4	
Duty Cycle	Continuous	
Coil Insulation Class	E or its equivalent (JETL) and B for UL	
Mounting Dimensions	68 (L) x 84 (W) mm 2-43/64" (L) x 3-5/16" (W)	
Weight	3 kg 6.6 Lbs	
Leadwire Length	235 mm 9-1/4"	320 mm 12-19/32"

Please read the page of "How to Use This Catalog" first for correct use of compressors and pumps.

Application Examples

Microfiche Camera

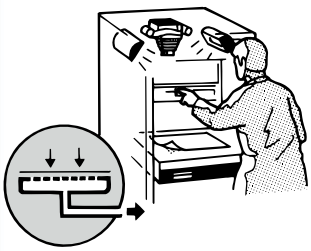

Solar Collection Screen

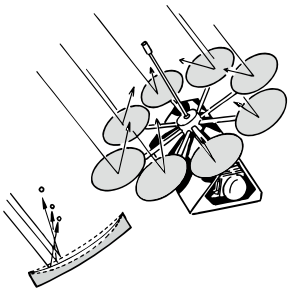

Dimensional Outline Drawing (Unit: mm)

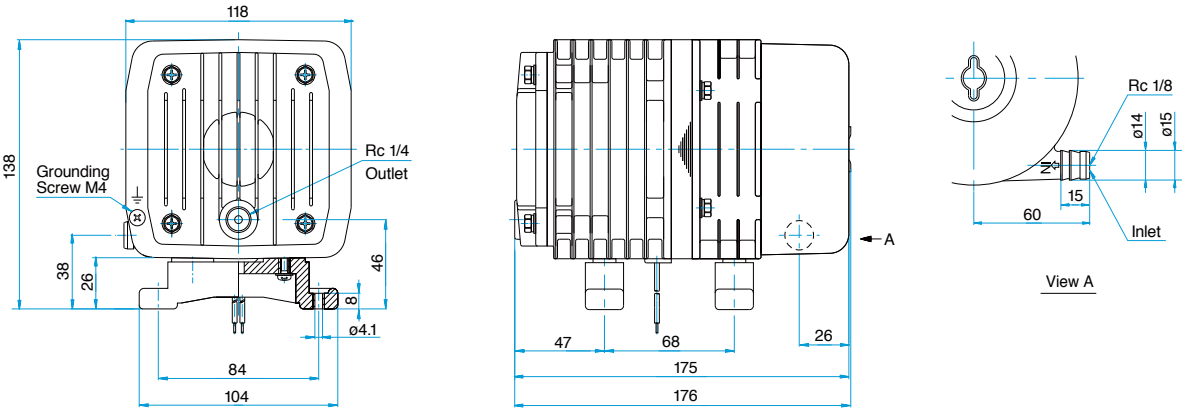

Vacuum Pump

Model VP0660

115V (60Hz) 230V (50Hz)

Airflow & Power Consumption

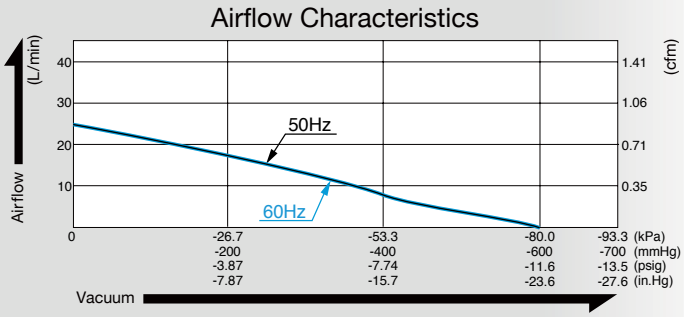

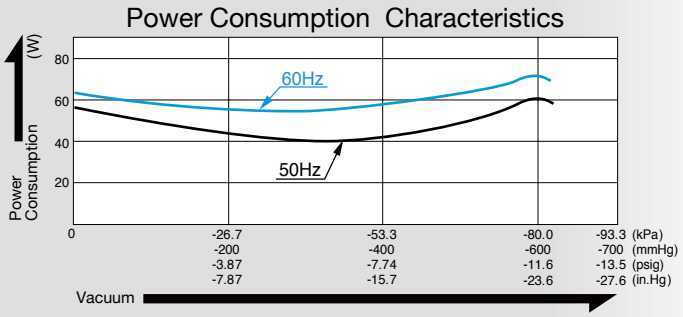

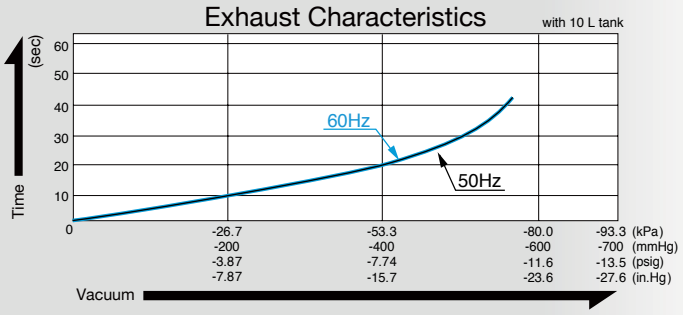

Specifications

Attainable Vacuum *1	-80 kPa (-600 mmHg) -800 mbar -23.6 in. Hg	
Free Air Displacement	25 L/min 0.88 cfm	
Rated Voltage	115 V AC	230 V AC
Power Consumption	70 W	60 W
Rated Frequency	60 Hz	50 Hz
Rated Performance	6,000 hours	
Inlet	ISO Rc 1/4	
Outlet	ISO Rc 1/4	
Duty Cycle	Continuous	
Coil Insulation Class	E or its equivalent (JETL) and B for UL	
Mounting Dimensions	102 (L) x 130 (W) mm 4-1/64" (L) x 5-1/8" (W)	
Weight	5 kg 11 Lbs	
Leadwire Length	300 mm 11-13/16"	600 mm 23-5/8"

*1: Operations at higher than -53.5kPa need an additional leak valve or relief valve on the inlet piping.
Please read the page of "How to Use This Catalog" first for correct use of compressors and pumps.

Application Examples

Vacuum Material Handling Equipment

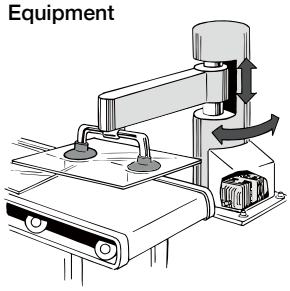

Vacuum Chucking

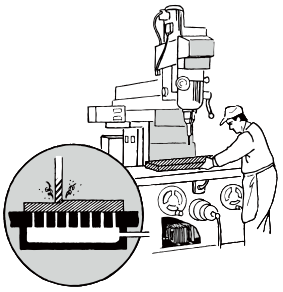

Dimensional Outline Drawing (Unit: mm)

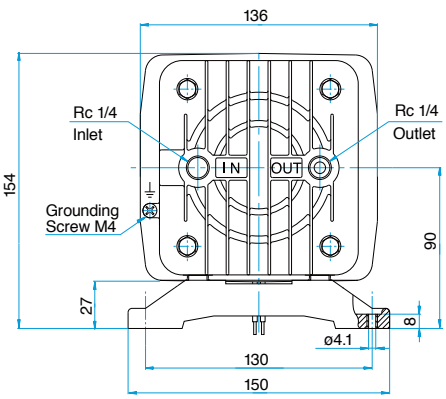

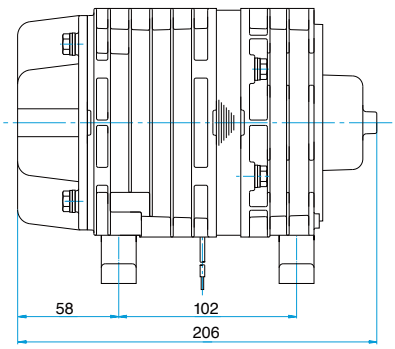

Vacuum Pump

Model VP0925A

Airflow & Power Consumption

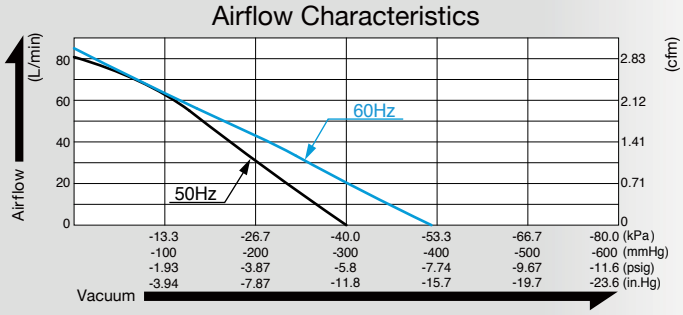

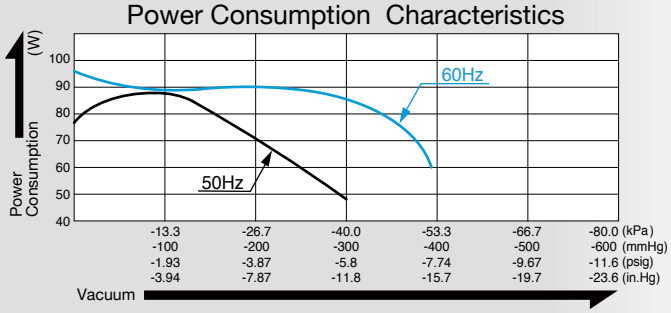

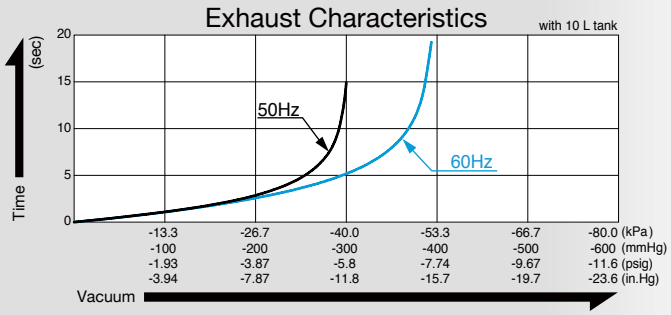

Specifications

Attainable Vacuum *1	-33.3 kPa (-250 mmHg) -333 mbar -9.84 in. Hg	
Free Air Displacement	80 L/min 2.83 cfm	
Rated Voltage	115 V AC	230 V AC
Power Consumption	95 W	88 W
Rated Frequency	60 Hz	50 Hz
Rated Performance	10,000 hours	
Inlet	ISO Rc 1/4	
Outlet	ISO Rc 1/4	
Duty Cycle	Continuous	
Coil Insulation Class	B or its equivalent (JETL)	
Mounting Dimensions	102 (L) x 130 (W) mm 4-1/64" (L) x 5-1/8" (W)	
Weight	4.5 kg 9.9 Lbs	
Leadwire Length	300 mm 11-13/16"	320 mm 12-19/32"

*1: Operations at higher than -33.3kPa need an additional leak valve or relief valve on the inlet piping.
Please read the page of "How to Use This Catalog" first for correct use of compressors and pumps.

Application Examples

Microfiche Camera

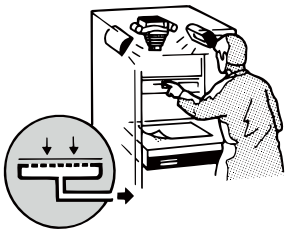

Vacuum Material Handling Equipment

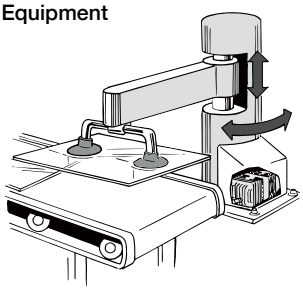

Dimensional Outline Drawing (Unit: mm)

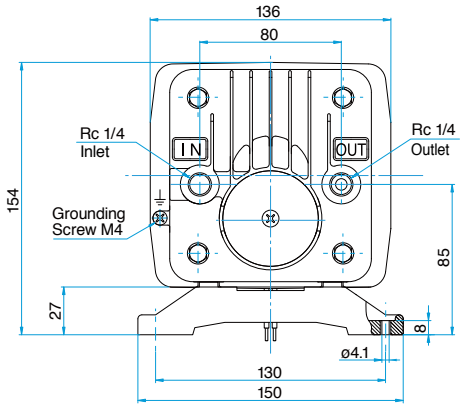

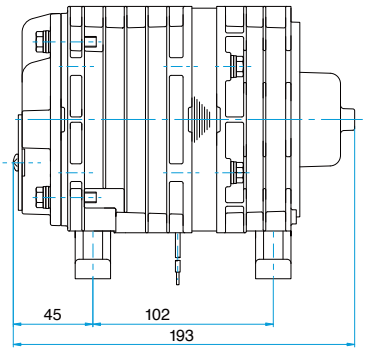

Vacuum Pump

Model VP0940

115V/230V 115V/230V

Airflow & Power Consumption

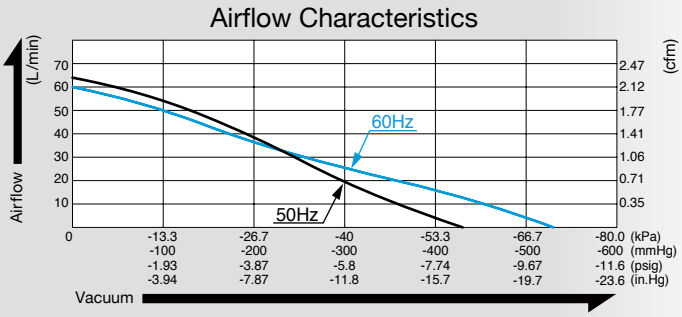

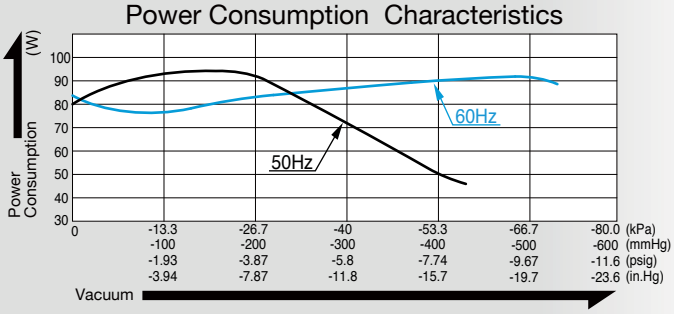

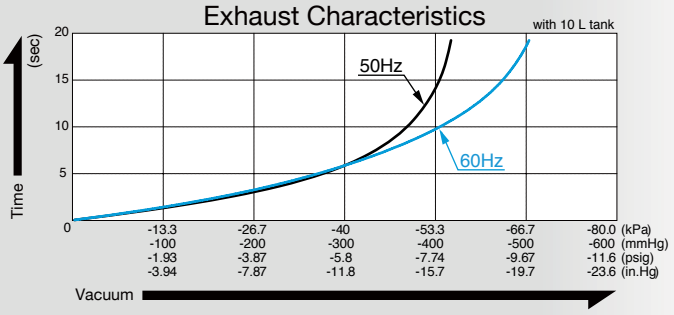

Specifications

Attainable Vacuum *1	-53.3 kPa (-400 mmHg) -533 mbar -15.7 in. Hg	
Free Air Displacement	60 L/min 2.12 cfm	
Rated Voltage	115 V AC	230 V AC
Power Consumption	95 W	
Rated Frequency	60 Hz	50 Hz
Rated Performance	10,000 hours	
Inlet	ISO Rc 1/4	
Outlet	ISO Rc 1/4	
Duty Cycle	Continuous	
Coil Insulation Class	B or its equivalent (JETL) and B for UL	
Mounting Dimensions	102 (L) x 130 (W) mm 4-1/64" (L) x 5-1/8" (W)	
Weight	4.55 kg 10.0 Lbs	
Leadwire Length	300 mm 11-13/16"	320 mm 12-19/32"

*1: Operations at higher than -53.3kPa need an additional leak valve or relief valve on the inlet piping.
Please read the page of "How to Use This Catalog" first for correct use of compressors and pumps.

Application Examples

Label Sticking Machine

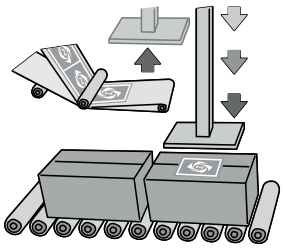

Dimensional Outline Drawing (Unit: mm)

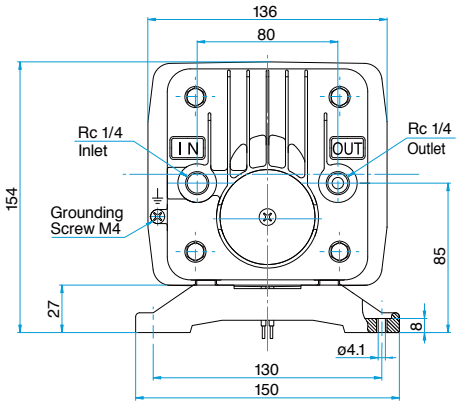

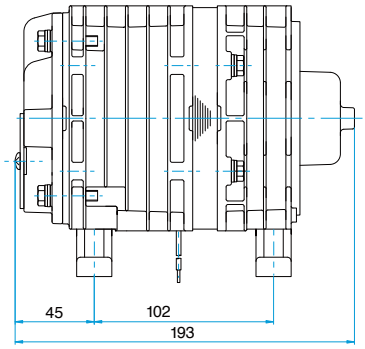

Vacuum Pump

Model VP0940T

Airflow & Power Consumption

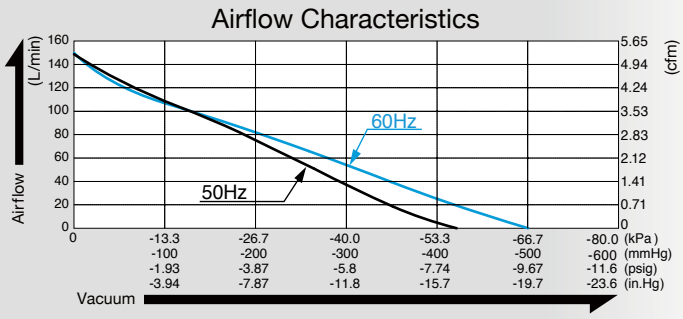

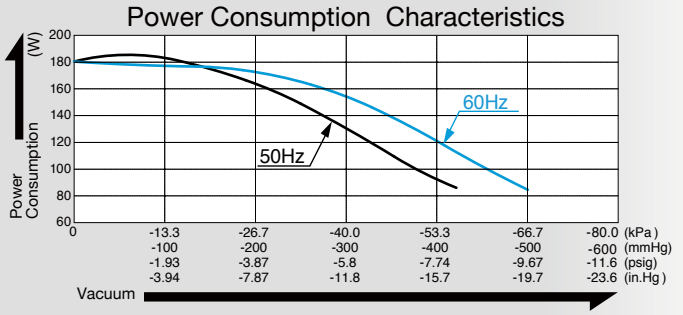

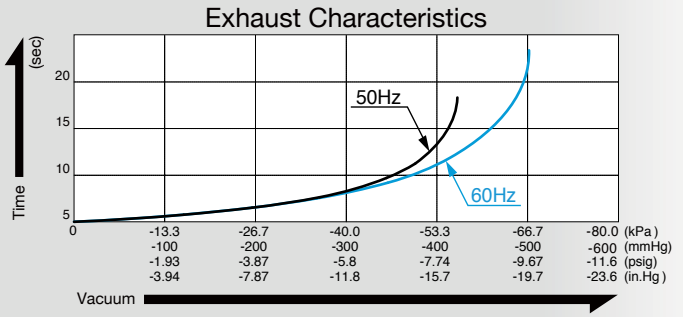

Specifications

Attainable Vacuum *1	-53.3 kPa (-400 mmHg) -533 mbar -15.7 in. Hg	
Free Air Displacement	120 L/min 4.24 cfm	
Rated Voltage	115 V AC *2	230 V AC
Power Consumption	185 W	
Rated Frequency	60 Hz	50 Hz
Rated Performance	10,000 hours	
Inlet	ISO Rc 1/4	
Outlet	ISO Rc 1/4	
Duty Cycle	Continuous	
Coil Insulation Class	B or its equivalent (JETL)	
Mounting Dimensions	172 (L) x 211 (W) mm 6-49/64" (L) x 8-5/16" (W)	
Weight	10 kg 22 Lbs	
Leadwire Length	300 mm 11-13/16"	320 mm 12-19/32"

*1: Operations at higher than -53.3kPa need an additional leak valve or relief valve on the inlet piping.
*2: UL Pending
Please read the page of "How to Use This Catalog" first for correct use of compressors and pumps.

Application Examples

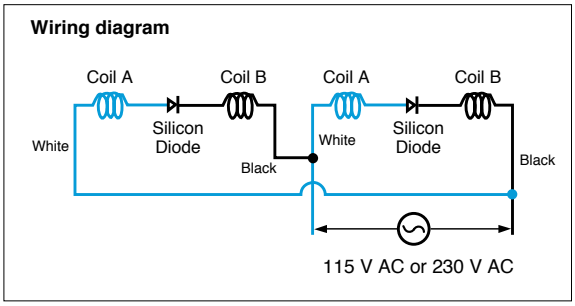

*The silencer, air filter, and pipe are not included with the product.
*Piping and wiring need to be done by the user.

Dimensional Outline Drawing (Unit: mm)

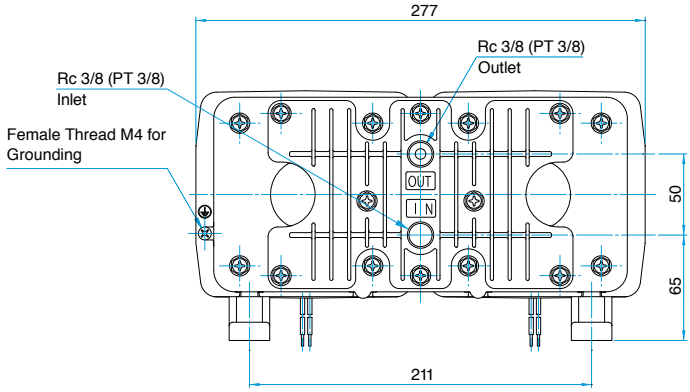

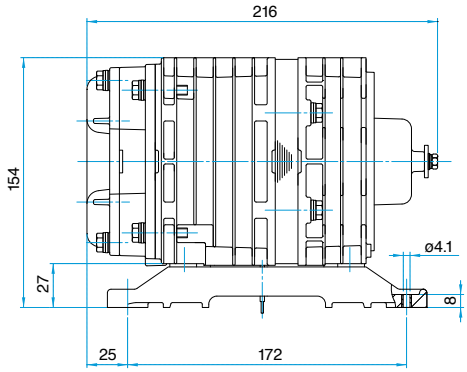

Vacuum Pump

Model VP0645

Airflow & Power Consumption

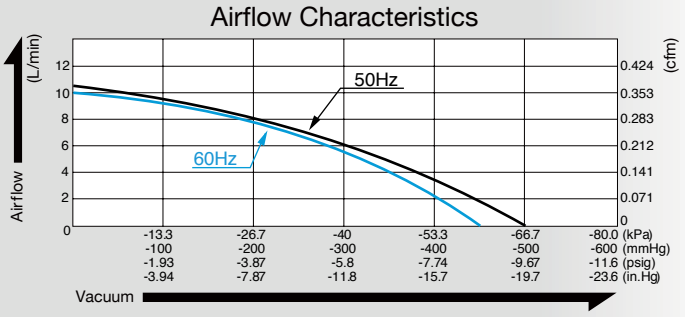

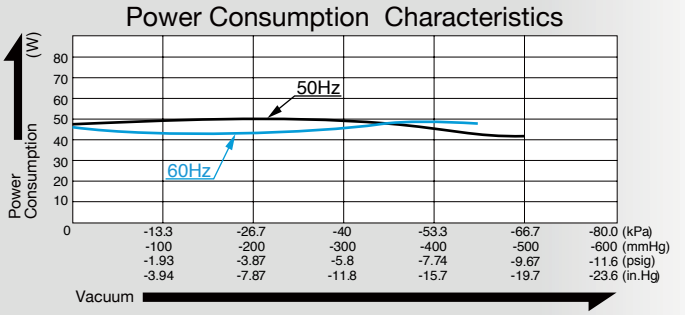

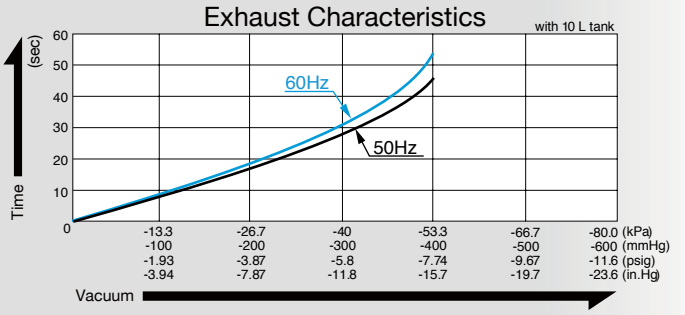

Specifications

Attainable Vacuum *1	-60 kPa (-450 mmHg) -600 mbar -17.7 in. Hg	
Free Air Displacement	10 L/min 0.35 cfm	
Rated Voltage	115 V AC	230 V AC
Power Consumption	48 W	50 W
Rated Frequency	60 Hz	50 Hz
Rated Performance	3,000 hours	
Inlet	15 mm O.D. hose barb	
Outlet	ISO Rc 1/4	
Duty Cycle	Continuous	
Coil Insulation Class	E or its equivalent (JETL)	
Mounting Dimensions	68 (L) x 84 (W) mm 2-43/64" (L) x 3-5/16" (W)	
Weight	3.2 kg 7.1 Lbs	
Leadwire Length	200 mm 7-7/8"	

*1: Operations at higher than -60kPa need an additional leak valve or relief valve on the inlet piping.
Please read the page of "How to Use This Catalog" first for correct use of compressors and pumps.

Application Examples

Liquid Purification

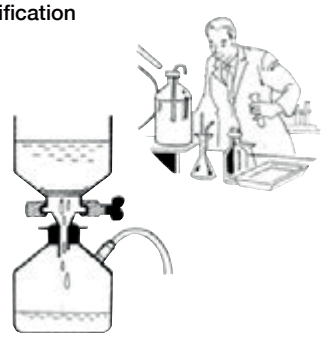

Dimensional Outline Drawing (Unit: mm)

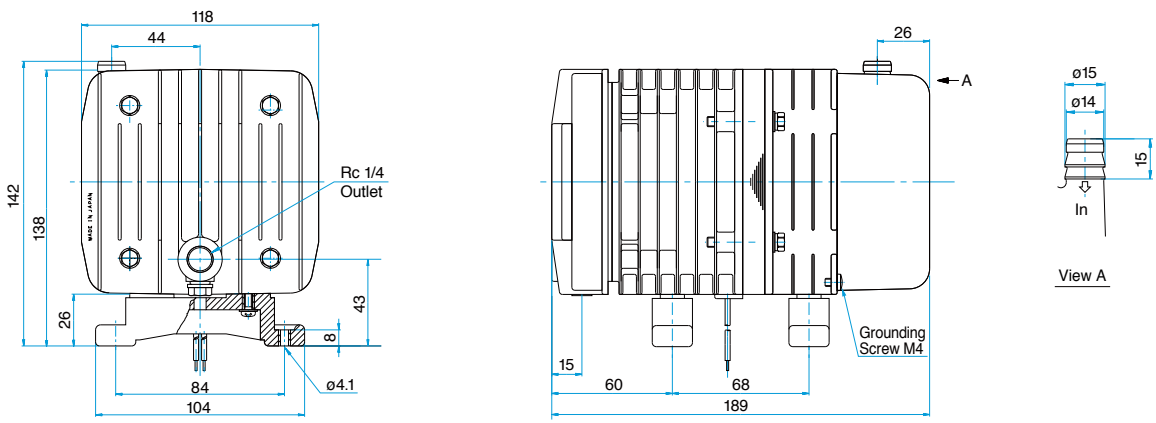

Vacuum Pump

Model VP0945

Airflow & Power Consumption

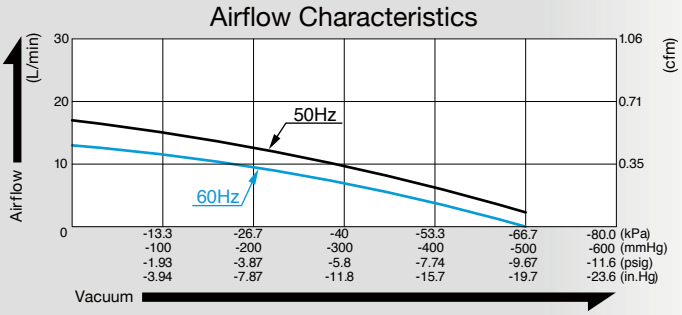

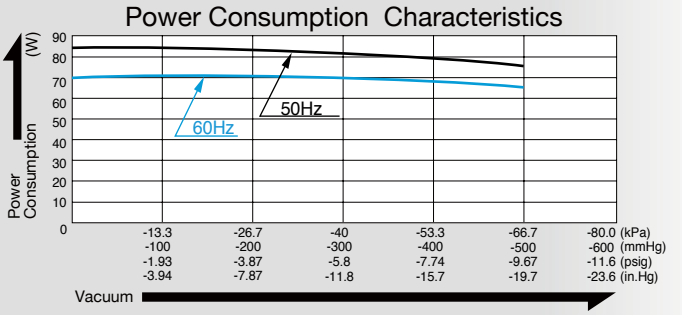

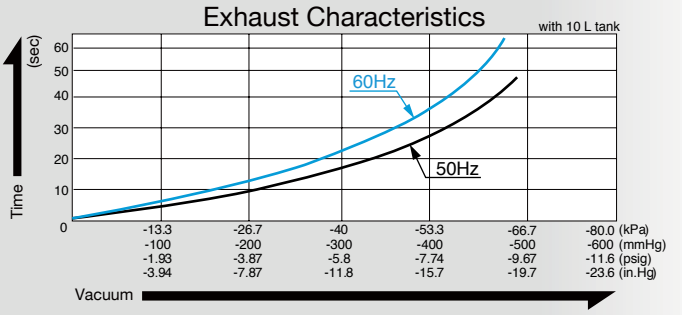

Specifications

Attainable Vacuum *1	-60 kPa (-450 mmHg) -600 mbar -17.7 in. Hg	
Free Air Displacement	12 L/min 0.42 cfm	
Rated Voltage	115 V AC	230 V AC
Power Consumption	70 W	85 W
Rated Frequency	60 Hz	50 Hz
Rated Performance	3,000 hours	
Inlet	15 mm O.D. hose barb	
Outlet	ISO Rc 1/4	
Duty Cycle	Continuous	
Coil Insulation Class	E or its equivalent (JETL)	
Mounting Dimensions	102 (L) x 130 (W) mm 4-1/64" (L) x 5-1/8" (W)	
Weight	4.9 kg 10.8 Lbs	
Leadwire Length	300 mm 11-13/16"	320 mm 12-19/32"

*1: Operations at higher than -60kPa need an additional leak valve or relief valve on the inlet piping.
Please read the page of "How to Use This Catalog" first for correct use of compressors and pumps.

Application Examples

Vacuum Vice

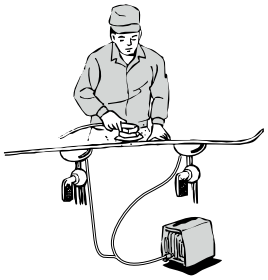

Impregnation Depressurizer

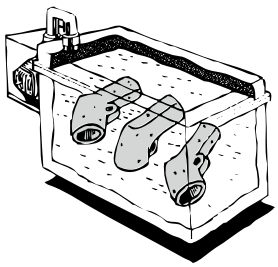

Dimensional Outline Drawing (Unit: mm)

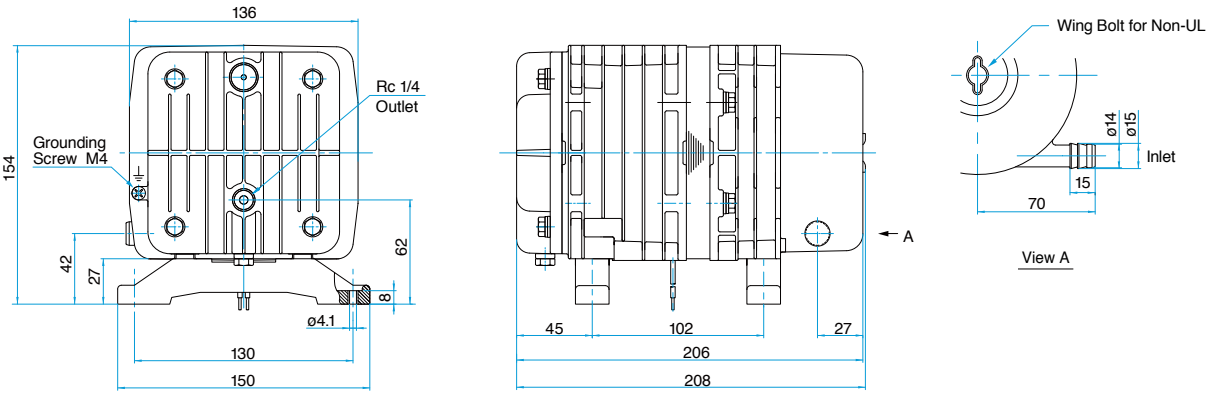

Vacuum Pump

Model VP0660x2

Airflow & Power Consumption

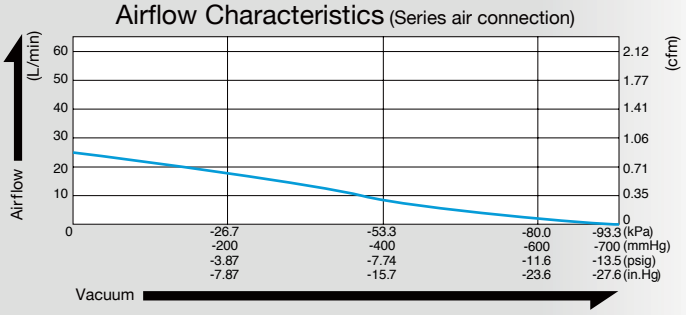

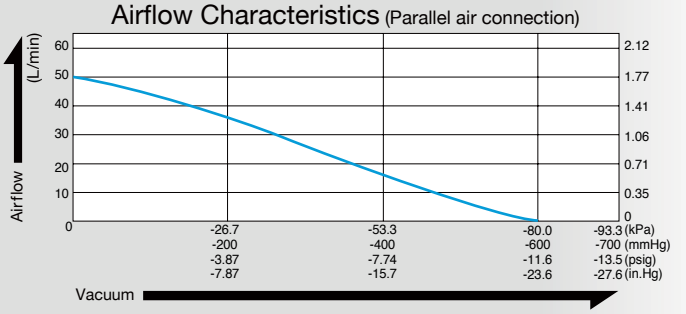

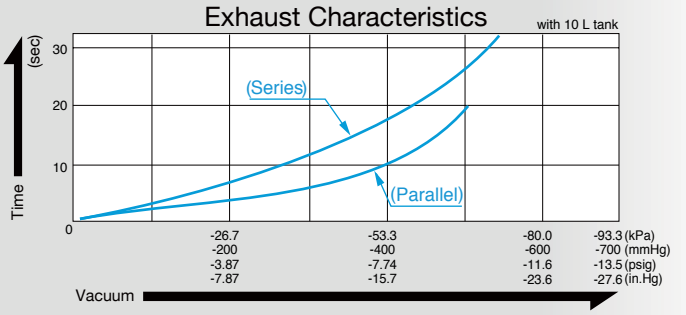

Specifications

Attainable Vacuum *1	Series Connection	-93.3 kPa (-700 mmHg) -933 mbar -27.6 in. Hg	Parallel Connection	-80 kPa (-600 mmHg) -800 mbar -23.6 in. Hg
Free Air Displacement		25 L/min 0.88 cfm		50 L/min 1.77 cfm
Rated Performance	6,000 hours			
Rated Voltage	115 V AC		230 V AC	
Power Consumption	125 W		100 W	
Rated Frequency	60 Hz		50 Hz	
Inlet	ISO Rc 1/4, 2 ports			
Outlet	ISO Rc 1/4, 2 ports			
Duty Cycle	Continuous			
Coil Insulation Class	B or its equivalent (JETL)			
Mounting Dimensions	280 (L) x 130 (W) mm 11-1/32" (L) x 5-1/8" (W)			
Weight	10 kg 22 Lbs			
Leadwire Length	150 mm 5-7/8"		600 mm 23-5/8"	

*1: Operations at higher than -93.3kPa in series or -80kPa in parallel need an additional leak valve or relief valve on the inlet piping.
Please read the page of "How to Use This Catalog" first for correct use of compressors and pumps.

Application Examples

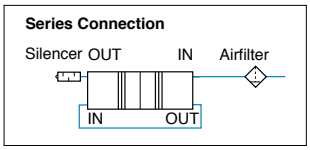

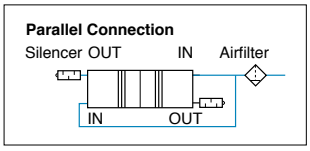

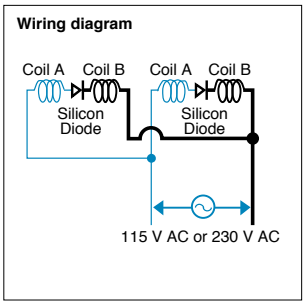

* Air line connection is required by the user.

Dimensional Outline Drawing (Unit: mm)

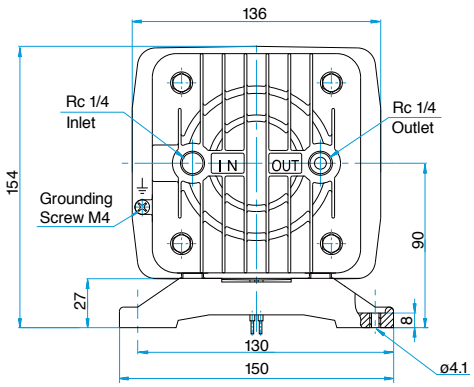

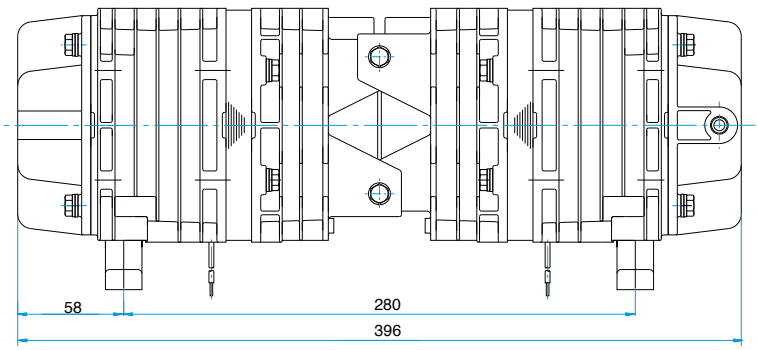

AIR COMPRESSOR

DC LINEAR

Free Piston Compressor

Page

Compressor

Model DAH102-X1

12 V DC

Airflow & Electric Current

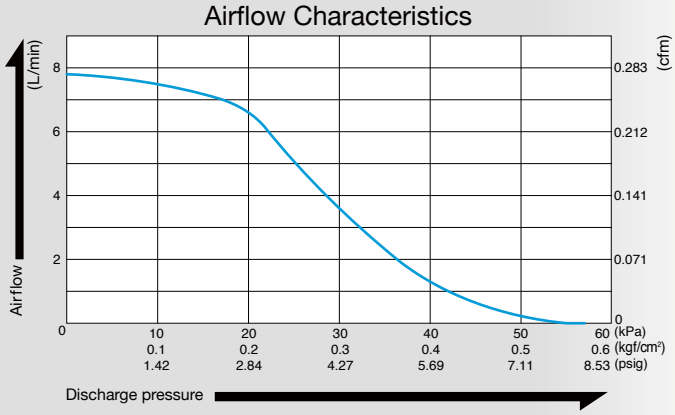

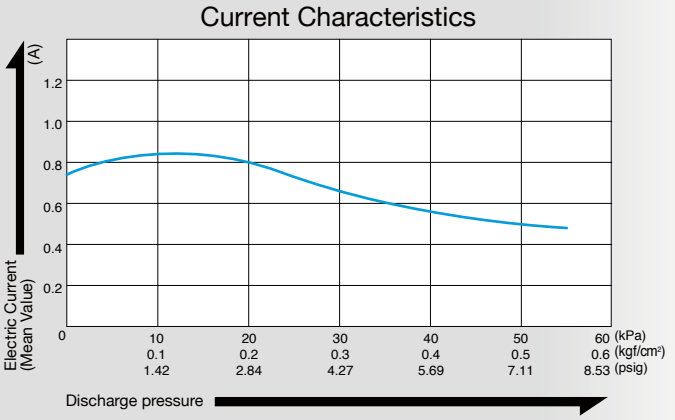

Specifications

Rated Pressure	20 kPa (0.2 kgf/cm²) 0.2 bar 2.84 psig
Rated Airflow	5 L/min *1 0.177 cfm
Maximum Pressure	50 kPa (0.5 kgf/cm²) 0.5 bar 7.11 psig
Rated Voltage	12 V DC
Current (Mean Value)	0.81 A
Rated Performance (MTTF)	10,000 hours
Outlet	6 mm O.D. hose barb
Duty Cycle	Continuous
Coil Insulation Class	A or its equivalent
Mounting Dimensions	76 (L) x 70 (W) mm 2-63/64" (L) x 2-3/4" (W)
Weight	0.91 kg 2.01 Lbs
Leadwire Length	300 mm 11-13/16"

*1: Airflow at rated pressure.
Please read the page of "How to Use This Catalog" first for correct use of compressors and pumps.

Application Examples

Medical equipment, analyzers, etc.

Dimensional Outline Drawing (Unit: mm)

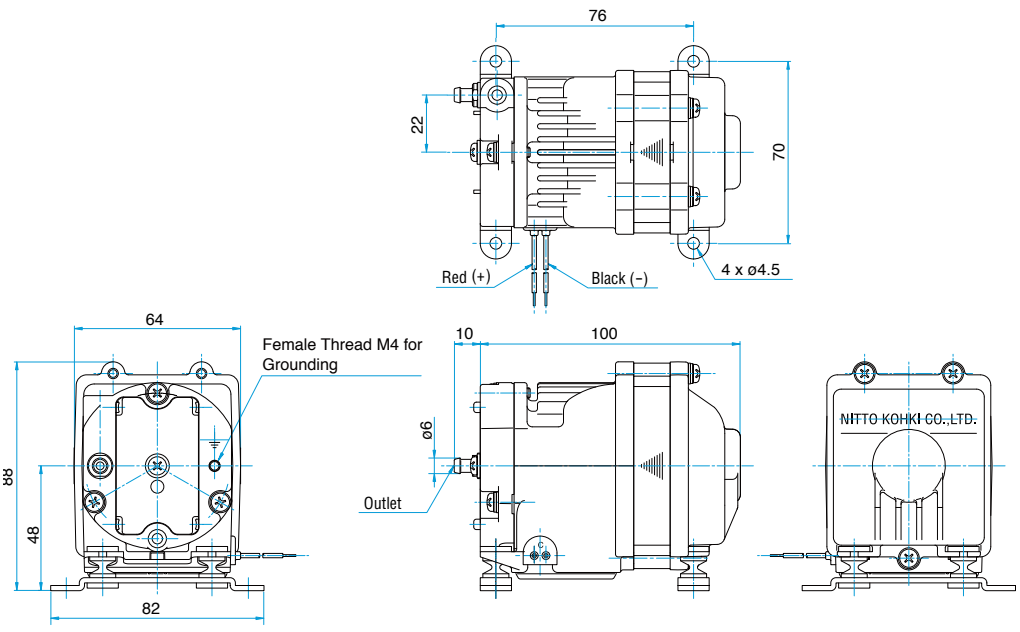

Heavy duty rubber feet available on request to prevent drop damage when located within portable devices.

Compressor

Model DAH102-Y1

24 V DC

Airflow & Electric Current

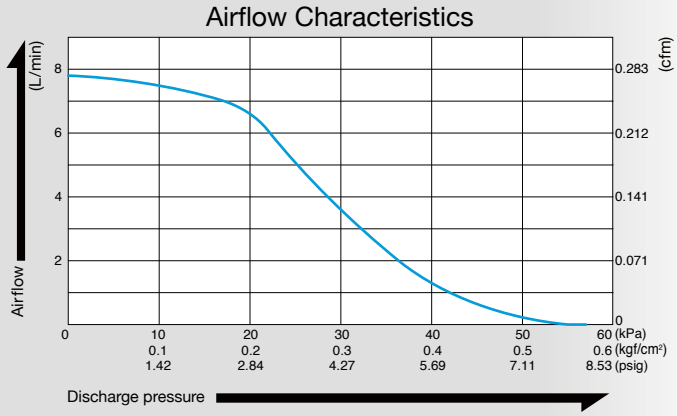

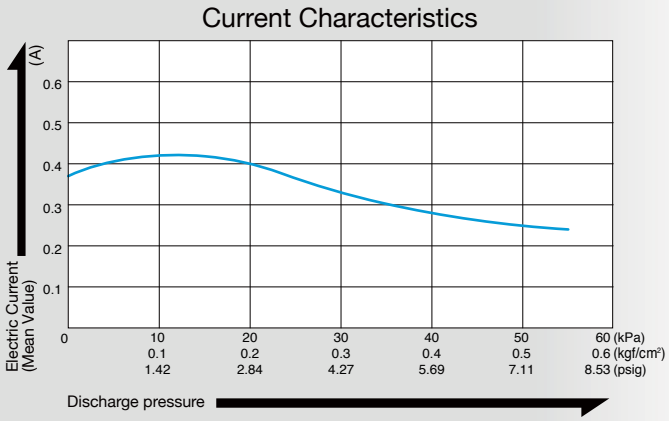

Specifications

Rated Pressure	20 kPa (0.2 kgf/cm²) 0.2 bar 2.84 psig
Rated Airflow	5 L/min *1 0.177 cfm
Maximum Pressure	50 kPa (0.5 kgf/cm²) 0.5 bar 7.11 psig
Rated Voltage	24 V DC
Current (Mean Value)	0.40 A
Rated Performance (MTTF)	10,000 hours
Outlet	6 mm O.D. hose barb
Duty Cycle	Continuous
Coil Insulation Class	A or its equivalent
Mounting Dimensions	76 (L) x 70 (W) mm 2-63/64" (L) x 2-3/4" (W)
Weight	0.91 kg 2.01 Lbs
Leadwire Length	300 mm 11-13/16"

*1: Airflow at rated pressure.
Please read the page of "How to Use This Catalog" first for correct use of compressors and pumps.

Application Examples

Medical equipment, analyzers, etc.

Dimensional Outline Drawing (Unit: mm)

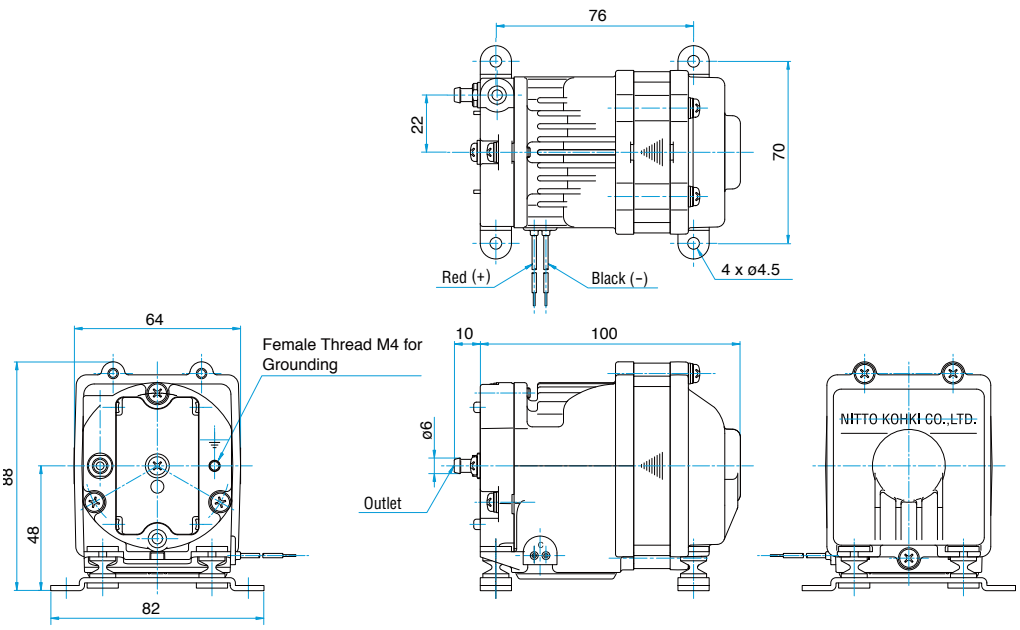

Heavy duty rubber feet available on request to prevent drop damage when located within portable devices.

Compressor

Model DAH105-X1

12 V DC

Airflow & Electric Current

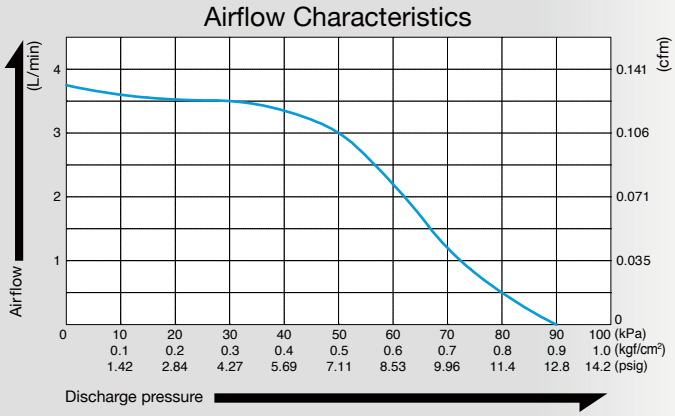

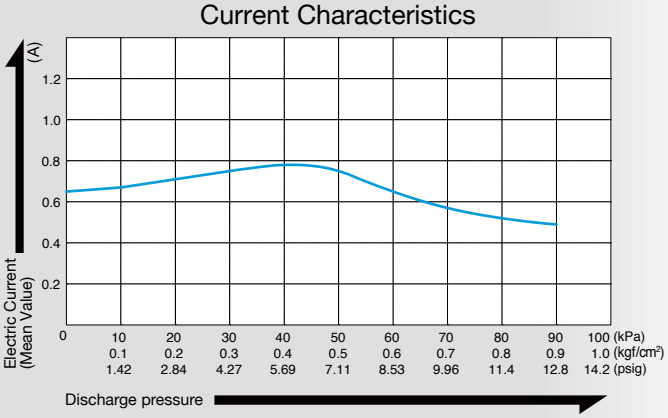

Specifications

Rated Pressure	50 kPa (0.5 kgf/cm²) 0.5 bar 7.11 psig
Rated Airflow	2.5 L/min *1 0.088 cfm
Maximum Pressure	80 kPa (0.8 kgf/cm²) 0.8 bar 11.4 psig
Rated Voltage	12 V DC
Current (Mean Value)	0.74 A
Rated Performance (MTTF)	10,000 hours
Outlet	6 mm O.D. hose barb
Duty Cycle	Continuous
Coil Insulation Class	A or its equivalent
Mounting Dimensions	76 (L) x 70 (W) mm 2-63/64" (L) x 2-3/4" (W)
Weight	0.91 kg 2.01 Lbs
Leadwire Length	300 mm 11-13/16"

*1: Airflow at rated pressure.
Please read the page of "How to Use This Catalog" first for correct use of compressors and pumps.

Application Examples

Medical equipment, analyzers, etc.

Dimensional Outline Drawing (Unit: mm)

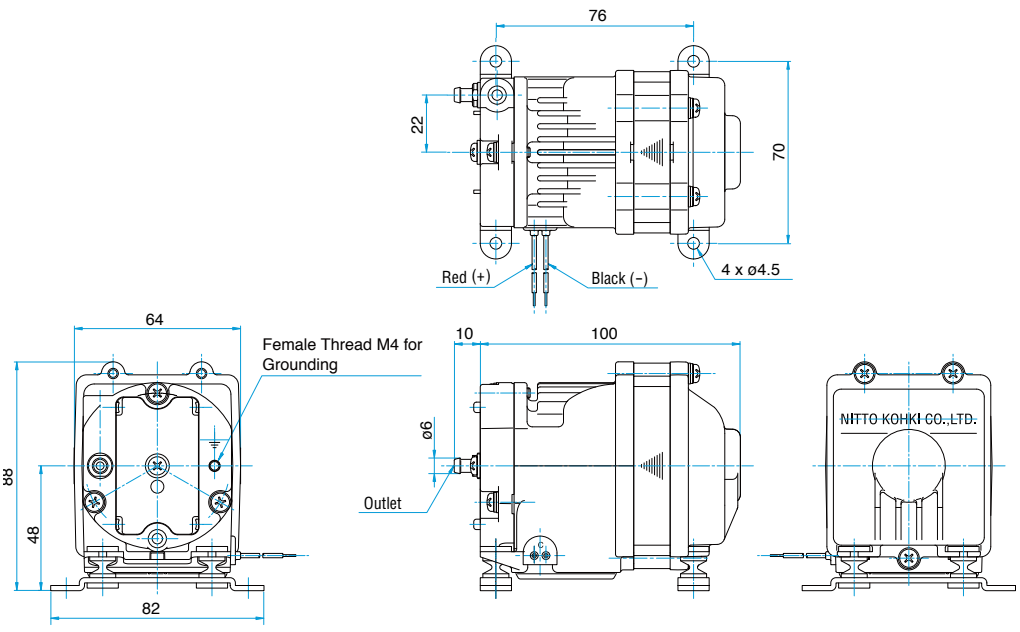

Heavy duty rubber feet available on request to prevent drop damage when located within portable devices.

Compressor

Model DAH105-Y1

24 V DC

Airflow & Electric Current

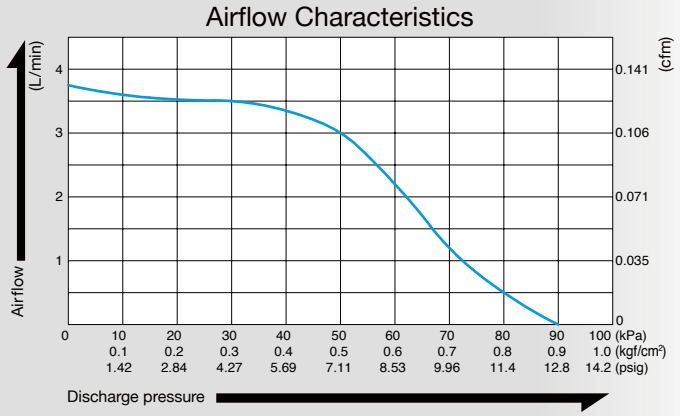

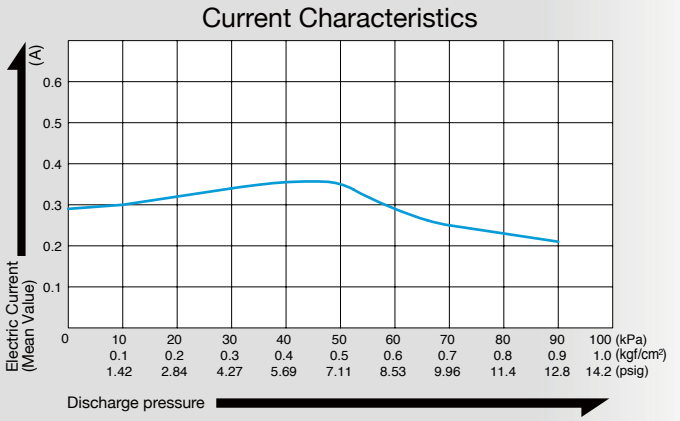

Specifications

Rated Pressure	50 kPa (0.5 kgf/cm²) 0.5 bar 7.11 psig
Rated Airflow	2.5 L/min *1 0.088 cfm
Maximum Pressure	80 kPa (0.8 kgf/cm²) 0.8 bar 11.4 psig
Rated Voltage	24 V DC
Current (Mean Value)	0.35 A
Rated Performance (MTTF)	10,000 hours
Outlet	6 mm O.D. hose barb
Duty Cycle	Continuous
Coil Insulation Class	A or its equivalent
Mounting Dimensions	76 (L) x 70 (W) mm 2-63/64" (L) x 2-3/4" (W)
Weight	0.91 kg 2.01 Lbs
Leadwire Length	300 mm 11-13/16"

*1: Airflow at rated pressure.
Please read the page of "How to Use This Catalog" first for correct use of compressors and pumps.

Application Examples

Medical equipment, analyzers, etc.

Dimensional Outline Drawing (Unit: mm)

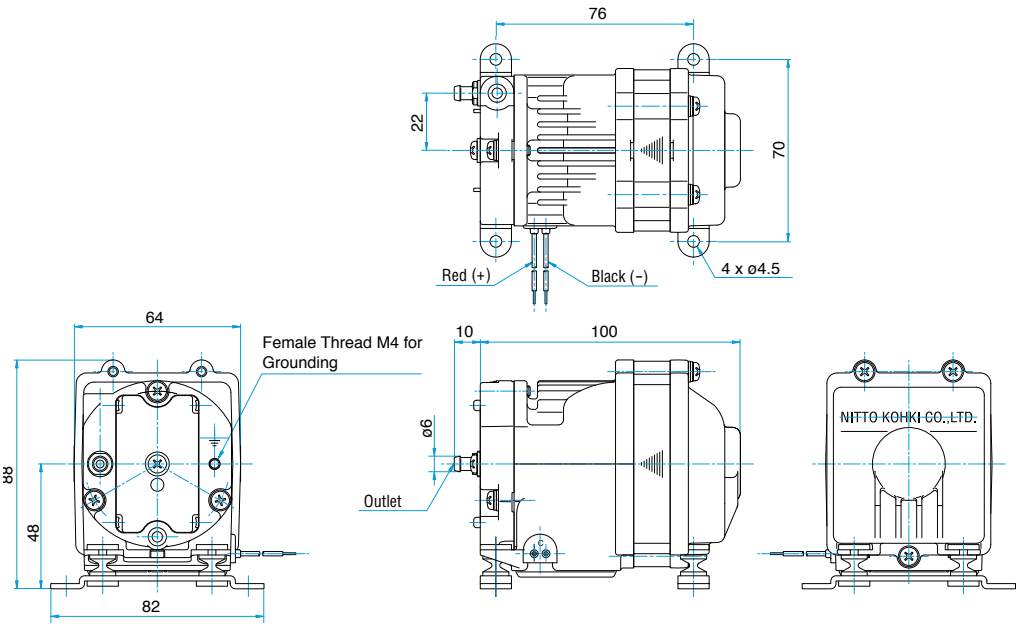

Heavy duty rubber feet available on request to prevent drop damage when located within portable devices.

Compressor

Model DAH110-X1

12 V DC

Airflow & Electric Current

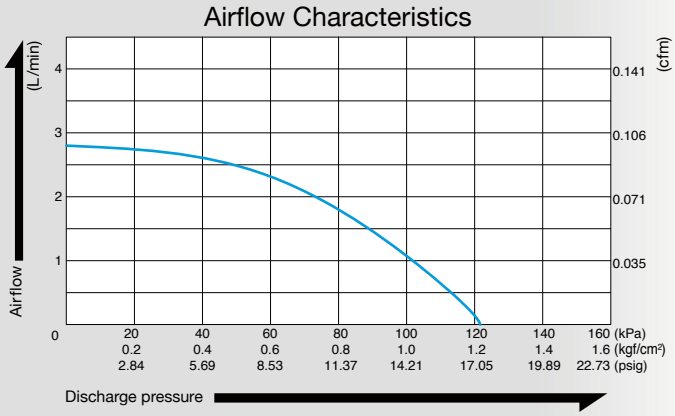

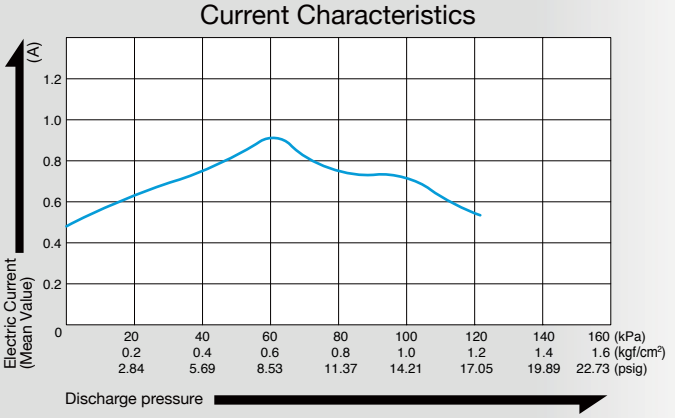

Specifications

Rated Pressure	100 kPa (1.0 kgf/cm²) 1.0 bar 14.2 psig
Rated Airflow	1.0 L/min *1 0.035 cfm
Maximum Pressure	120 kPa (1.2 kgf/cm²) 1.2 bar 17.1 psig
Rated Voltage	12 V DC
Current (Mean Value)	0.74 A
Rated Performance (MTTF)	5,000 hours
Outlet	4.7 mm O.D. hose barb
Duty Cycle	Continuous
Coil Insulation Class	A or its equivalent
Mounting Dimensions	76 (L) x 70 (W) mm 2-63/64" (L) x 2-3/4" (W)
Weight	0.91 kg 2.01 Lbs
Leadwire Length	300 mm 11-13/16"

*1: Airflow at rated pressure.
Please read the page of "How to Use This Catalog" first for correct use of compressors and pumps.

Application Examples

Medical equipment, analyzers, etc.

Dimensional Outline Drawing (Unit: mm)

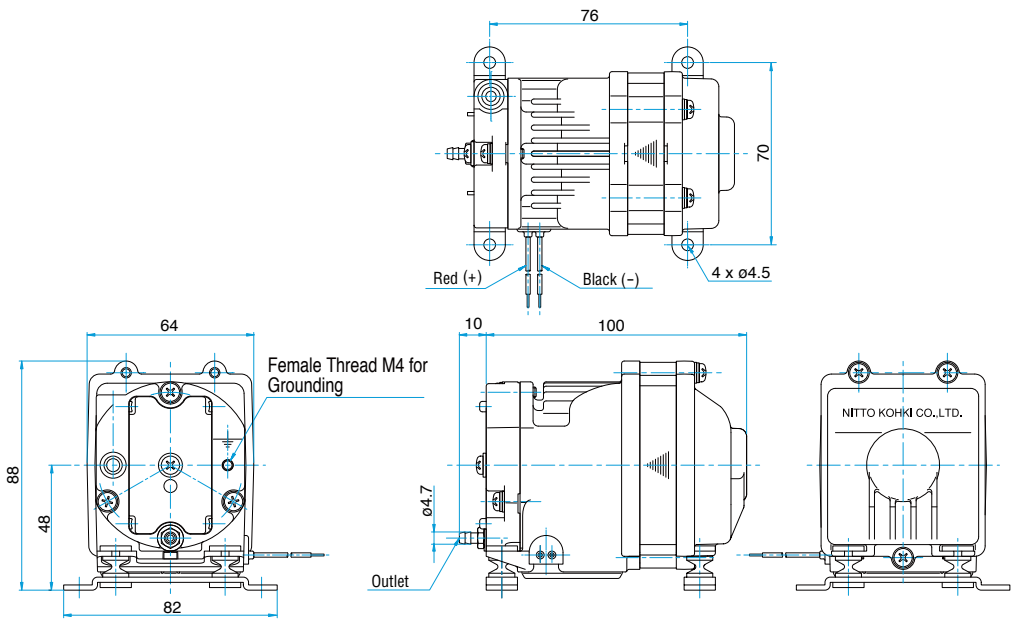

Heavy duty rubber feet available on request to prevent drop damage when located within portable devices.

Compressor

Model DAH110-Y1

24 V DC

Airflow & Electric Current

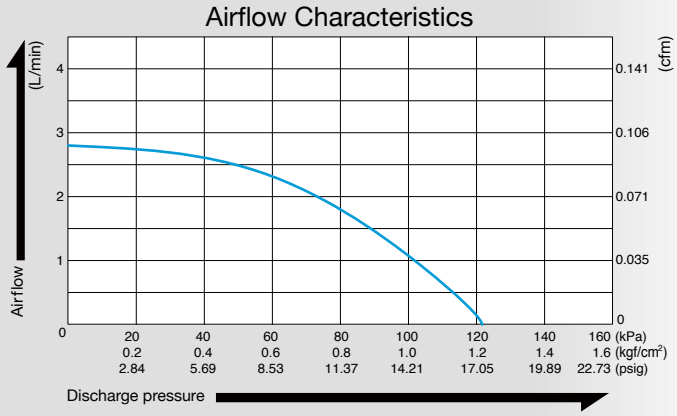

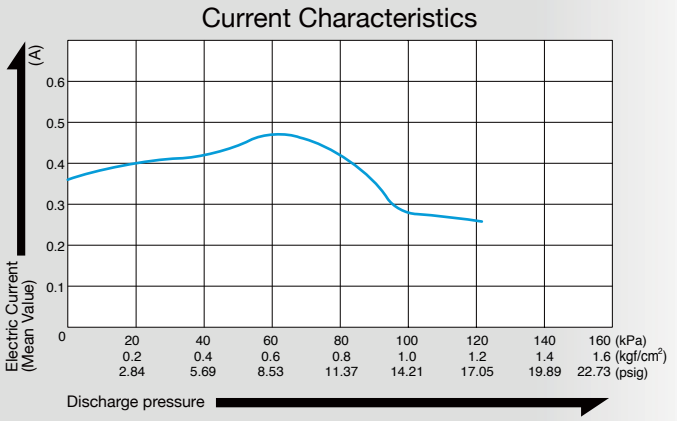

Specifications

Rated Pressure	100 kPa (1.0 kgf/cm²) 1.0 bar 14.2 psig
Rated Airflow	1.0 L/min *1 0.035 cfm
Maximum Pressure	120 kPa (1.2 kgf/cm²) 1.2 bar 17.1 psig
Rated Voltage	24 V DC
Current (Mean Value)	0.27 A
Rated Performance (MTTF)	5,000 hours
Outlet	4.7 mm O.D. hose barb
Duty Cycle	Continuous
Coil Insulation Class	A or its equivalent
Mounting Dimensions	76 (L) x 70 (W) mm 2-63/64" (L) x 2-3/4" (W)
Weight	0.91 kg 2.01 Lbs
Leadwire Length	300 mm 11-13/16"

*1: Airflow at rated pressure.
Please read the page of "How to Use This Catalog" first for correct use of compressors and pumps.

Application Examples

Medical equipment, analyzers, etc.

Dimensional Outline Drawing (Unit: mm)

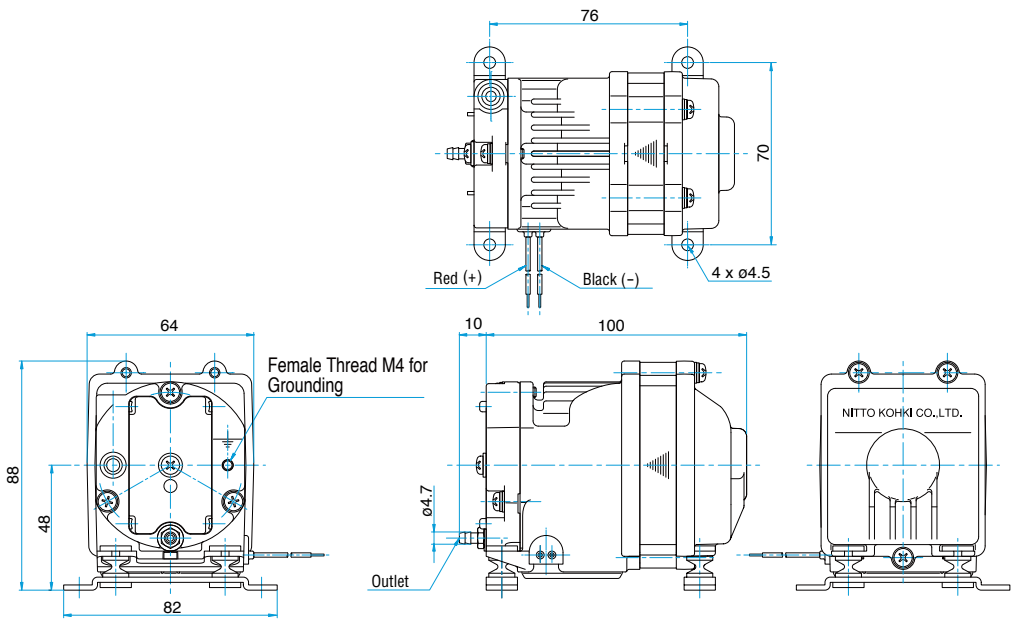

Heavy duty rubber feet available on request to prevent drop damage when located within portable devices.

VACUUM PUMP

DC LINEAR

Free Piston Vacuum Pump

Page

Vacuum Pump

Model DVH130-X1

12 V DC

Airflow & Electric Current

Airflow Characteristics

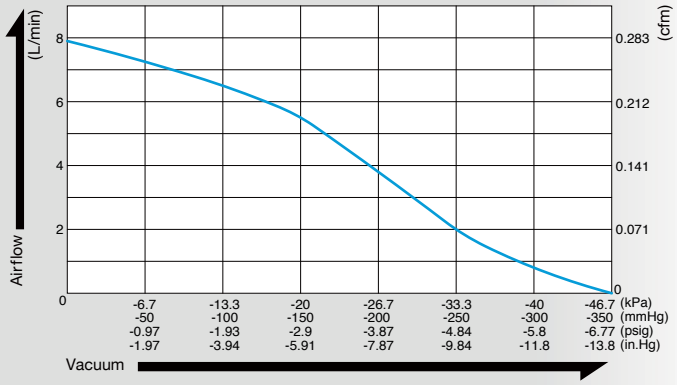

Current Characteristics

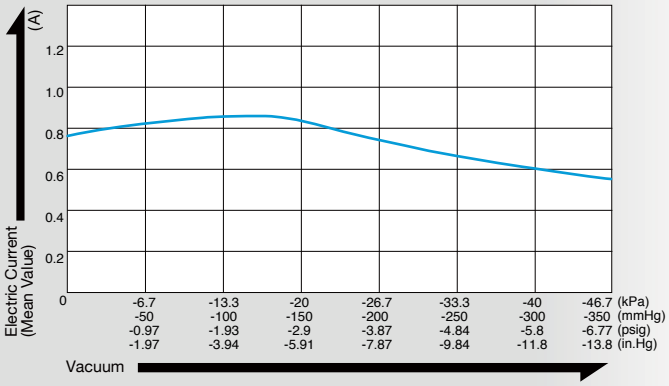

Specifications

Attainable Vacuum	-40 kPa (-300 mmHg) -400 mbar -11.8 in. Hg
Free Air Displacement	7 L/min *1 0.247 cfm
Rated Voltage	12 V DC
Current (Mean Value)	0.86 A
Rated Performance (MTTF)	10,000 hours
Inlet	6 mm O.D. hose barb
Outlet	6 mm O.D. hose barb
Duty Cycle	Continuous
Coil Insulation Class	A or its equivalent
Mounting Dimensions	76 (L) x 70 (W) mm 2-63/64" (L) x 2-3/4" (W)
Weight	0.91 kg 2.01 Lbs
Leadwire Length	300 mm 11-13/16"

*1: Free air displacement at no-load operation.
Please read the page of "How to Use This Catalog" first for correct use of compressors and pumps.

Application Examples

Medical equipment, analyzers, etc.

Dimensional Outline Drawing (Unit: mm)

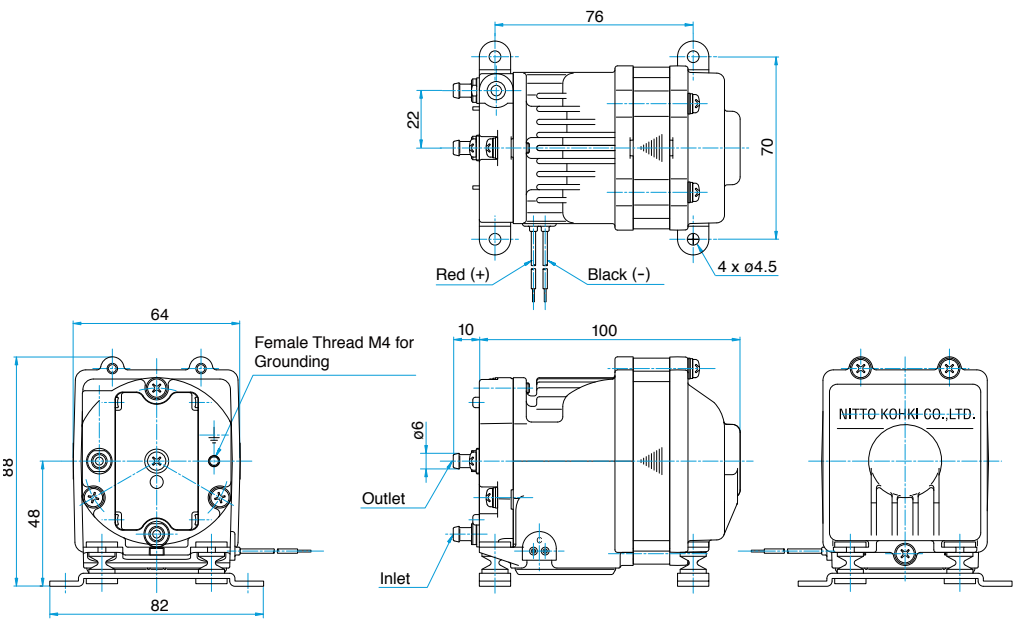

Heavy duty rubber feet available on request to prevent drop damage when located within portable devices.

Vacuum Pump

Model DVH130-Y1

24 V DC

Airflow & Electric Current

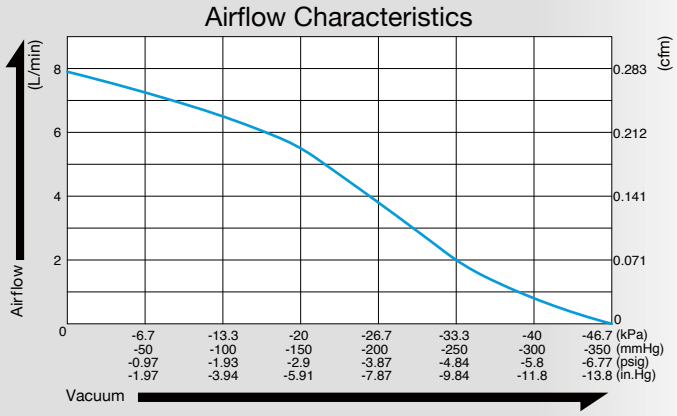

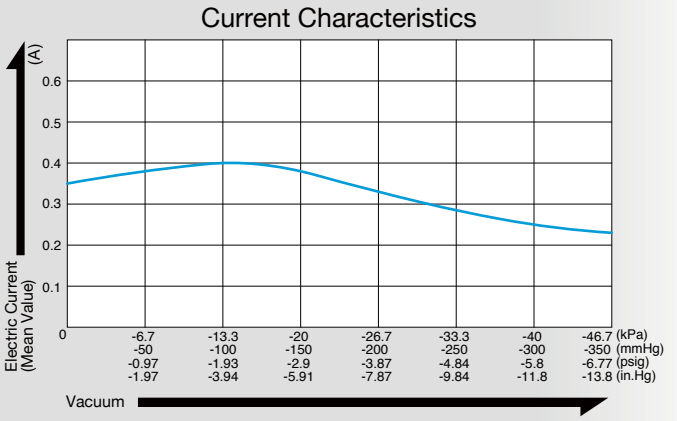

Specifications

Attainable Vacuum	-40 kPa (-300 mmHg) -400 mbar -11.8 in. Hg
Free Air Displacement	7 L/min *1 0.247 cfm
Rated Voltage	24 V DC
Current (Mean Value)	0.41 A
Rated Performance (MTTF)	10,000 hours
Inlet	6 mm O.D. hose barb
Outlet	6 mm O.D. hose barb
Duty Cycle	Continuous
Coil Insulation Class	A or its equivalent
Mounting Dimensions	76 (L) x 70 (W) mm 2-63/64" (L) x 2-3/4" (W)
Weight	0.91 kg 2.01 Lbs
Leadwire Length	300 mm 11-13/16"

*1: Free air displacement at no-load operation.
Please read the page of "How to Use This Catalog" first for correct use of compressors and pumps.

Application Examples

Medical equipment, analyzers, etc.

Dimensional Outline Drawing (Unit: mm)

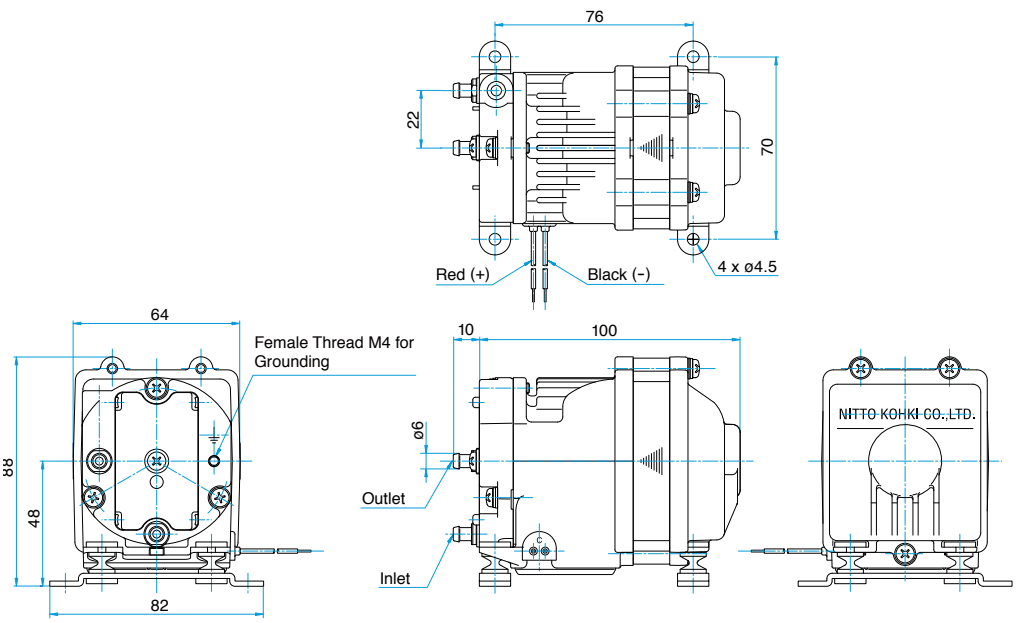

Heavy duty rubber feet available on request to prevent drop damage when located within portable devices.

Vacuum Pump

Model DVH145-X1

12 V DC

Airflow & Electric Current

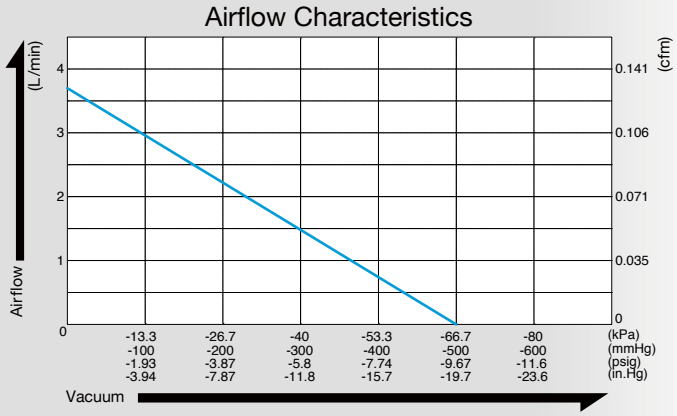

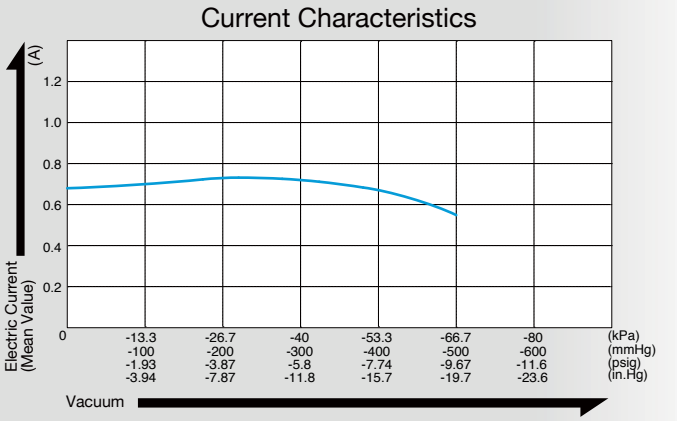

Specifications

Attainable Vacuum	-60 kPa (-450 mmHg) -600 mbar -17.7 in. Hg
Free Air Displacement	3 L/min *1 0.106 cfm
Rated Voltage	12 V DC
Current (Mean Value)	0.73 A
Rated Performance (MTTF)	10,000 hours
Inlet	6 mm O.D. hose barb
Outlet	6 mm O.D. hose barb
Duty Cycle	Continuous
Coil Insulation Class	A or its equivalent
Mounting Dimensions	76 (L) x 70 (W) mm 2-63/64" (L) x 2-3/4" (W)
Weight	0.91 kg 2.01 Lbs
Leadwire Length	300 mm 11-13/16"

*1: Free air displacement at no-load operation.
Please read the page of "How to Use This Catalog" first for correct use of compressors and pumps.

Application Examples

Medical equipment, analyzers, etc.

Dimensional Outline Drawing (Unit: mm)

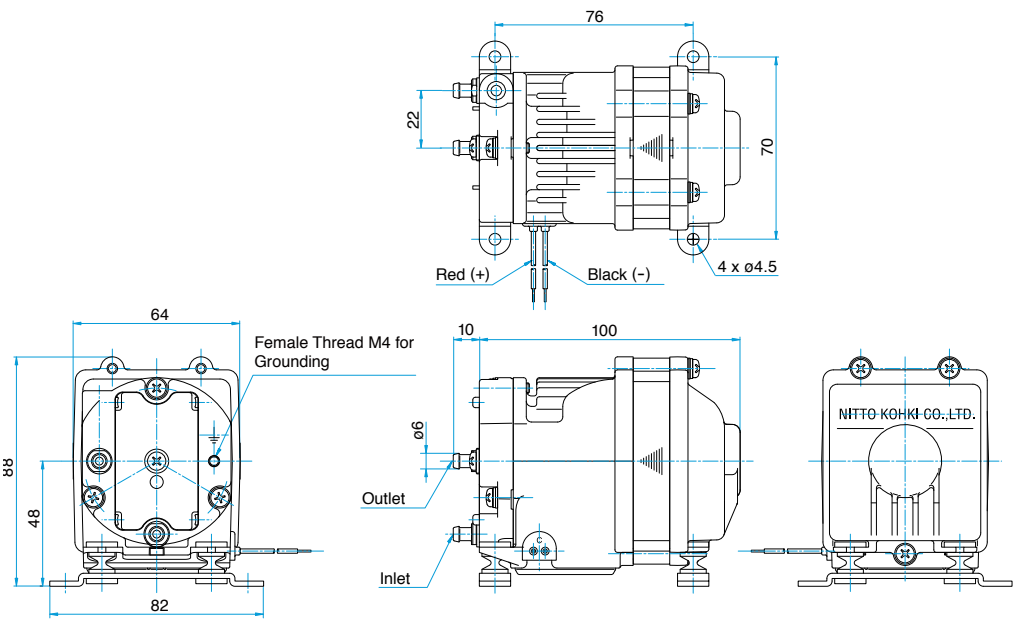

Heavy duty rubber feet available on request to prevent drop damage when located within portable devices.

Vacuum Pump

Model DVH145-Y1

24 V DC

Airflow & Electric Current

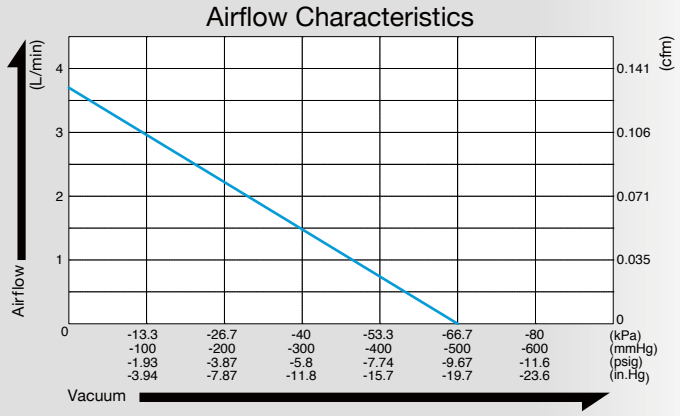

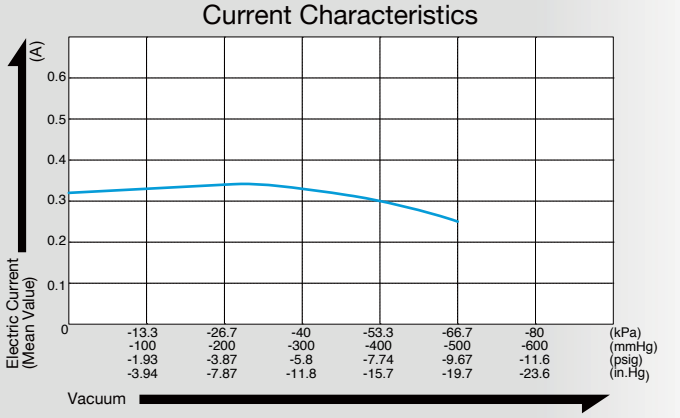

Specifications

Attainable Vacuum	-60 kPa (-450 mmHg) -600 mbar -17.7 in. Hg
Free Air Displacement	3 L/min *1 0.106 cfm
Rated Voltage	24 V DC
Current (Mean Value)	0.34 A
Rated Performance (MTTF)	10,000 hours
Inlet	6 mm O.D. hose barb
Outlet	6 mm O.D. hose barb
Duty Cycle	Continuous
Coil Insulation Class	A or its equivalent
Mounting Dimensions	76 (L) x 70 (W) mm 2-63/64" (L) x 2-3/4" (W)
Weight	0.91 kg 2.01 Lbs
Leadwire Length	300 mm 11-13/16"

*1: Free air displacement at no-load operation.
Please read the page of "How to Use This Catalog" first for correct use of compressors and pumps.

Application Examples

Medical equipment, analyzers, etc.

Dimensional Outline Drawing (Unit: mm)

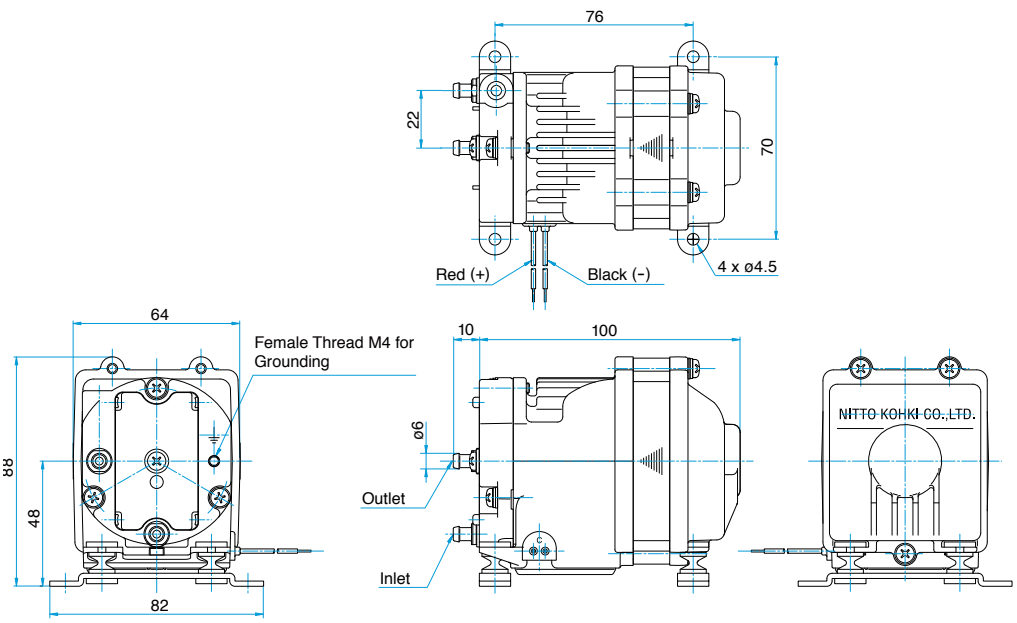

Heavy duty rubber feet available on request to prevent drop damage when located within portable devices.

DIAPHRAGM PUMP

AC
Linear Diaphragm Pump

Page

Compressor and Vacuum Pump

Model VC0100

Dual Type

115V 230V

Airflow & Power Consumption

Airflow Characteristics

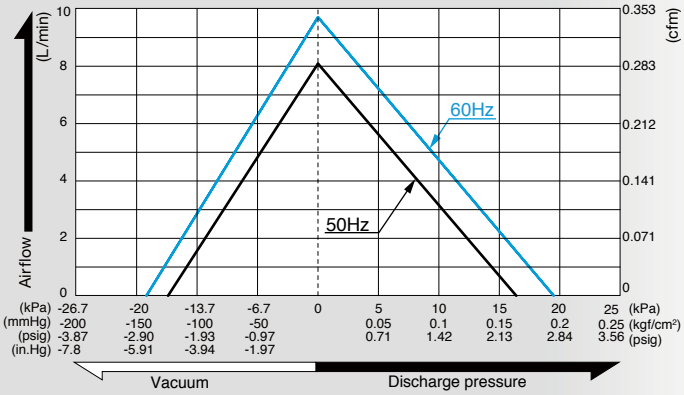

Power Consumption Characteristics

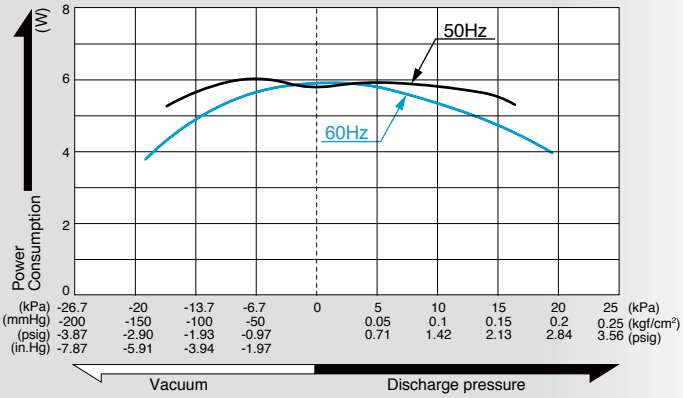

Specifications

Rated Pressure	4 kPa (0.04 kgf/cm²) 0.04 bar 0.57 psig	
Rated Airflow	6 L/min 0.212 cfm	
Maximum Pressure	16 kPa (0.16 kgf/cm²) 0.16 bar 2.28 psig	
Attainable Vacuum	-14.7 kPa (-110 mmHg) -147 mbar -4.33 in.Hg	
Rated Voltage	120 V AC	230 V AC
Power Consumption	6 W	
Rated Frequency	60 Hz	50 Hz
Rated Performance	5,000 hours	
Working Pressure Range	-14.7 kPa to 16 kPa (-110 mmHg to 0.16 kgf/cm²) -147 mbar to 0.16 bar -4.33 in.Hg to 2.28 psig	
Inlet	6 mm O.D. hose barb	
Outlet	6 mm O.D. hose barb	
Duty Cycle	Continuous	
Coil Insulation Class	A for 120V or its equivalent	E for 230V or its equivalent
Mounting Dimensions	70 (L) x 72 (W) mm 2-3/4" (L) x 2-53/64" (W)	
Weight	0.45 kg 0.99 Lbs	
Leadwire Length	300 mm 11-13/16"	

Please read the page of "How to Use This Catalog" first for correct use of compressors and pumps.

Application Examples

Massage Devices

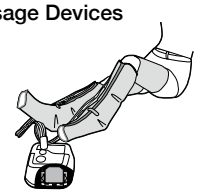

Bedsore Prevention Mattress

Dimensional Outline Drawing (Unit: mm)

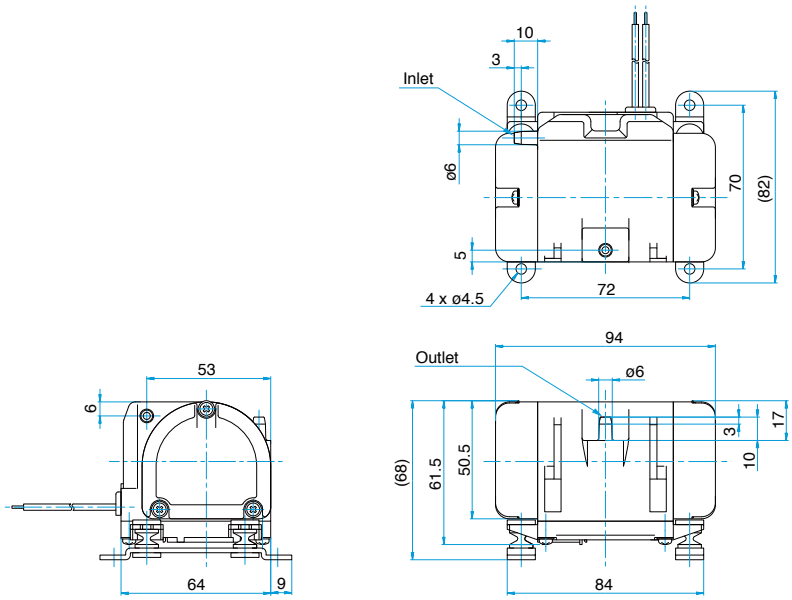

Compressor

Model VC0100

Blower Type

120V 230V

Airflow & Power Consumption

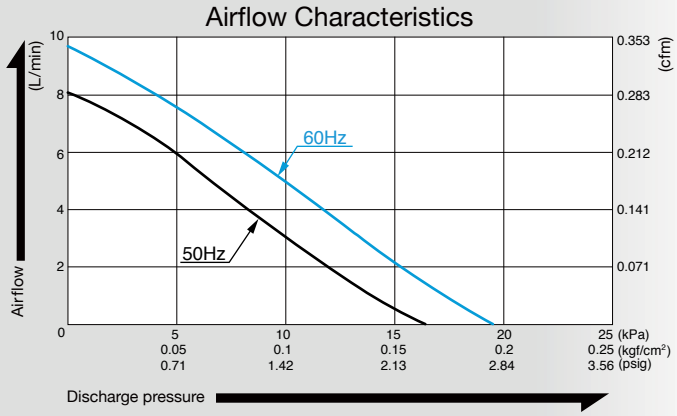

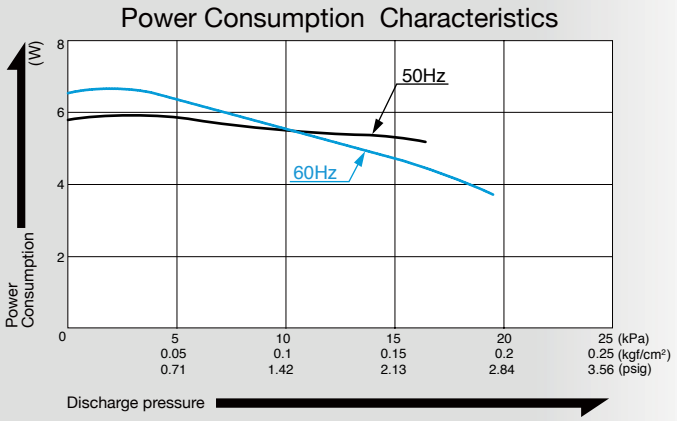

Specifications

Rated Pressure	4 kPa (0.04 kgf/cm²) 0.04 bar 0.57 psig	
Rated Airflow	6 L/min 0.212 cfm	
Maximum Pressure	16 kPa (0.16 kgf/cm²) 0.16 bar 2.28 psig	
Rated Voltage	120 V AC	230 V AC
Power Consumption	6 W	
Rated Frequency	60 Hz	50 Hz
Rated Performance	10,000 hours	
Working Pressure Range	0 to 16 kPa (0 to 0.16 kgf/cm²) 0 to 0.16 bar 0 to 2.28 psig	
Outlet	6 mm O.D. hose barb	
Duty Cycle	Continuous	
Coil Insulation Class	A for 120V or its equivalent	E for 230V or its equivalent
Mounting Dimensions	70 (L) x 72 (W) mm 2-3/4" (L) x 2-53/64" (W)	
Weight	0.45 kg 0.99 Lbs	
Leadwire Length	300 mm 11-13/16"	

Please read the page of "How to Use This Catalog" first for correct use of compressors and pumps.

Application Examples

Massage Devices

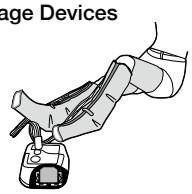

Bedsore Prevention Mattress

Dimensional Outline Drawing (Unit: mm)

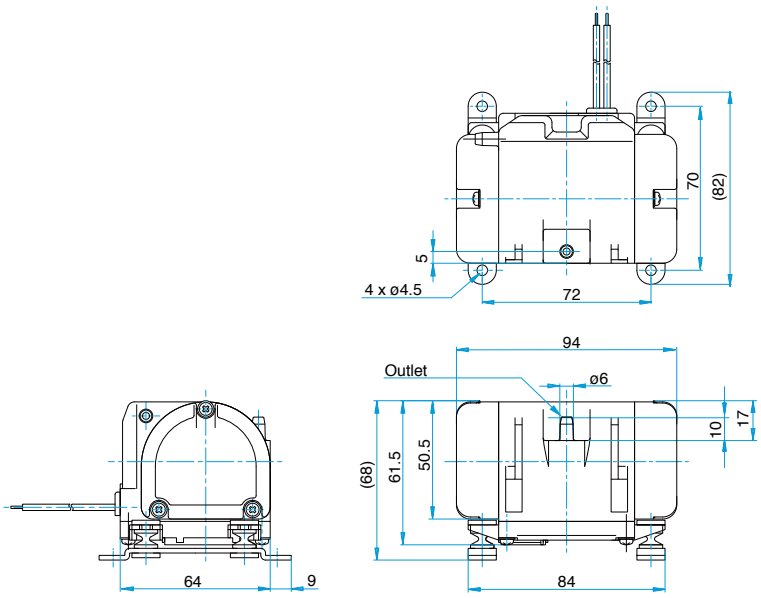

Compressor and Vacuum Pump

Model VC0101

Dual Type

115V 230V

Airflow & Power Consumption

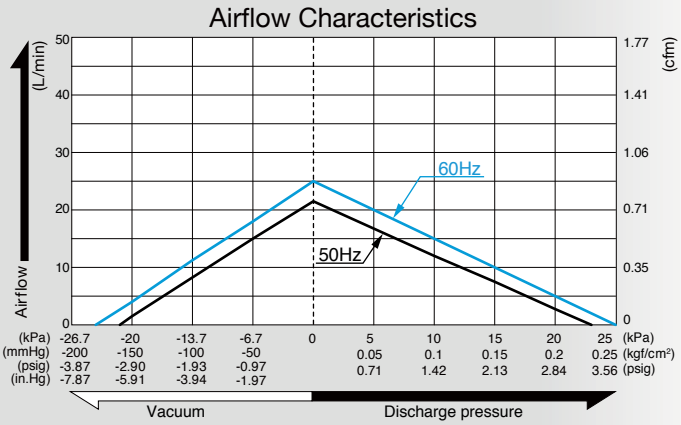

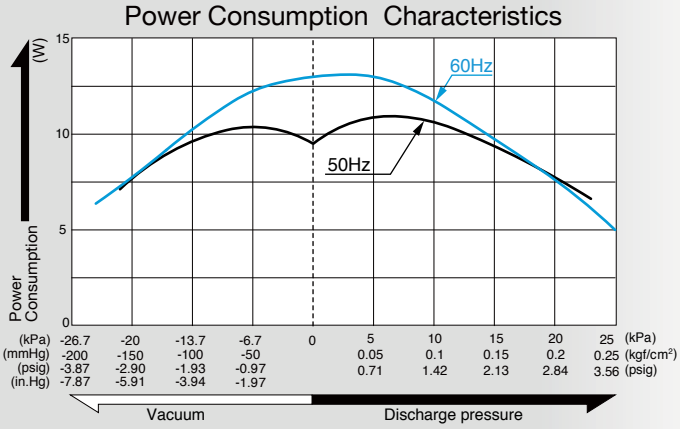

Specifications

Rated Pressure	10 kPa (0.1 kgf/cm²) 0.1 bar 1.42 psig	
Rated Airflow	10 L/min 0.35 cfm	
Rated Voltage	120 V AC	230 V AC
Maximum Pressure	18 kPa (0.18 kgf/cm²) 0.18 bar 2.56 psig	15 kPa (0.15 kgf/cm²) 0.15 bar 2.13 psig
Attainable Vacuum	-18.7 kPa (-140 mmHg) -187 mbar -5.51 in.Hg	-10 kPa (-76 mmHg) -100 mbar -2.95 in.Hg
Working Pressure Range	-18.7 kPa to 18 kPa (-140 mmHg to 0.18 kgf/cm²) -187 mbar to 0.18 bar -5.51 in.Hg to 2.56 psig	-10 kPa to 15 kPa (-76 mmHg to 0.15 kgf/cm²) -100 mbar to 0.15 bar -2.95 in.Hg to 2.13 psig
Power Consumption	11 W	
Rated Frequency	60 Hz	50 Hz
Rated Performance	5,000 hours	
Inlet	7.5 mm O.D. hose barb	
Outlet	7.5 mm O.D. hose barb	
Duty Cycle	Continuous	
Coil Insulation Class	A for 120V or its equivalent	B for 230V or its equivalent
Mounting Dimensions	66 (L) x 100 (W) mm 2-19/32" (L) x 2-15/16" (W)	
Weight	0.82 kg 1.81 Lbs	
Leadwire Length	200 mm 7-7/8"	

Please read the page of "How to Use This Catalog" first for correct use of compressors and pumps.

Application Examples

Massage Devices

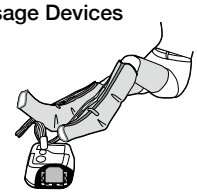

Bedsore Prevention Mattress

Dimensional Outline Drawing (Unit: mm)

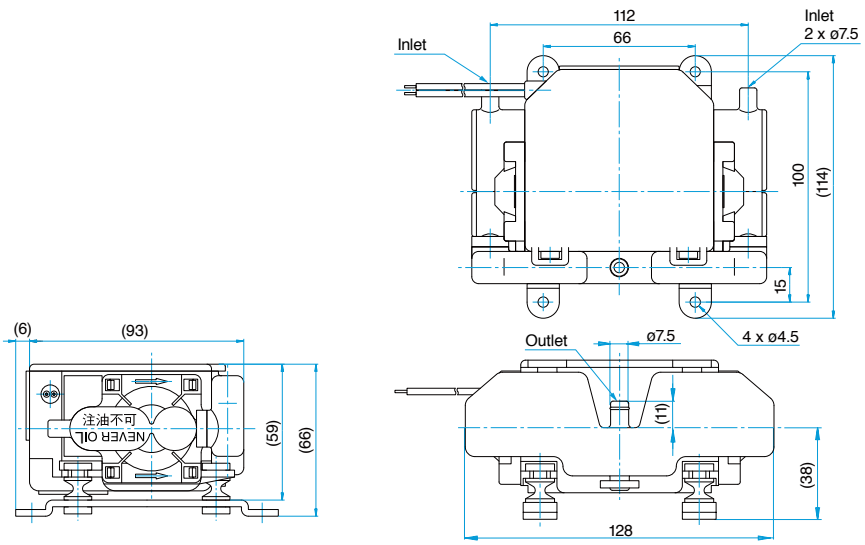

Compressor

Model VC0101

Blower Type

120V 230V

Airflow & Power Consumption

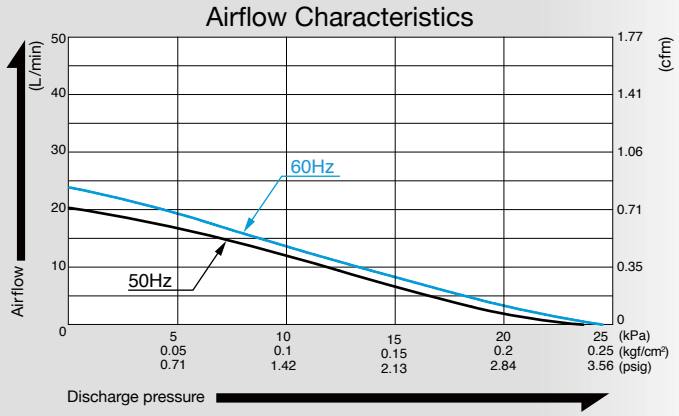

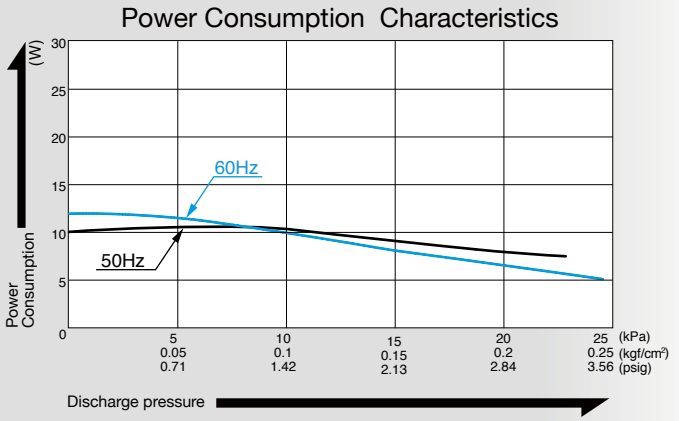

Specifications

Rated Pressure	10 kPa (0.1 kgf/cm²) 0.1 bar 1.42 psig	
Rated Airflow	10 L/min 0.35 cfm	
Maximum Pressure	20 kPa (0.2 kgf/cm²) 0.2 bar 2.84 psig	
Rated Voltage	120 V AC	230 V AC
Power Consumption	11 W	
Rated Frequency	60 Hz	50 Hz
Rated Performance	10,000 hours	
Working Pressure Range	0 to 20 kPa (0 to 0.2 kgf/cm²) 0 to 0.2 bar 0 to 2.84 psig	
Outlet	7.5 mm O.D. hose barb	
Duty Cycle	Continuous	
Coil Insulation Class	A for 120V or its equivalent	E for 230V or its equivalent
Mounting Dimensions	66 (L) x 100 (W) mm 2-19/32" (L) x 3-15/16" (W)	
Weight	0.82 kg 1.81 Lbs	
Leadwire Length	200 mm 7-7/8"	

Please read the page of "How to Use This Catalog" first for correct use of compressors and pumps.

Application Examples

Massage Devices

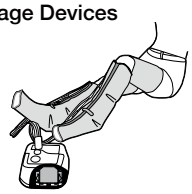

Bedsore Prevention Mattress

Dimensional Outline Drawing (Unit: mm)

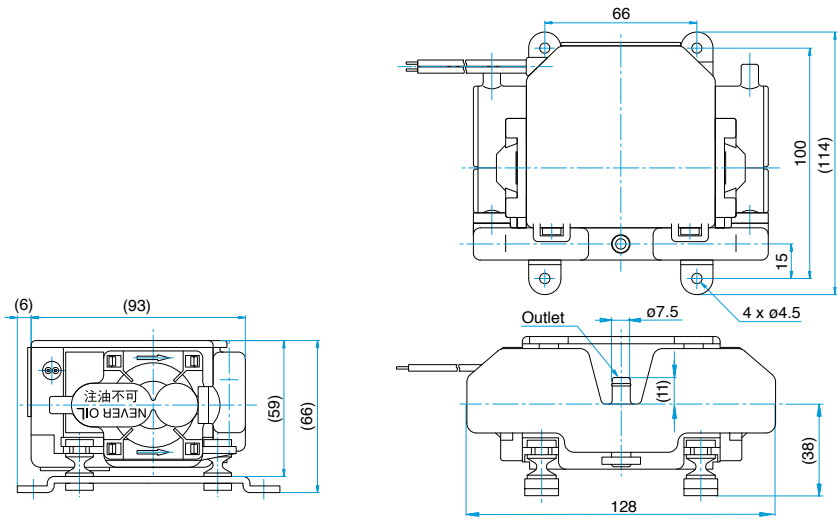

Compressor and Vacuum Pump

Model VC0101E

Dual Type

115V 230V

Airflow & Power Consumption

Airflow Characteristics

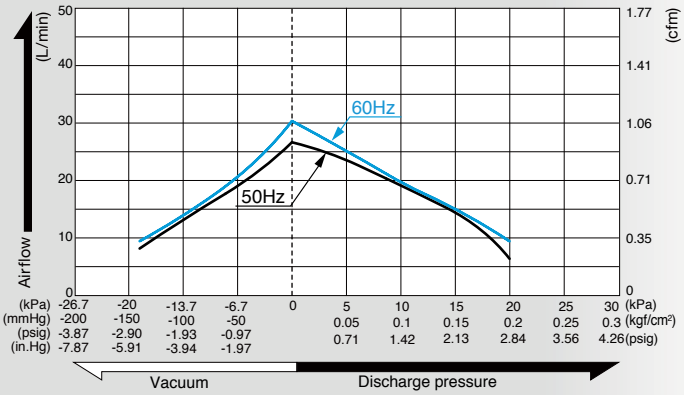

Power Consumption Characteristics

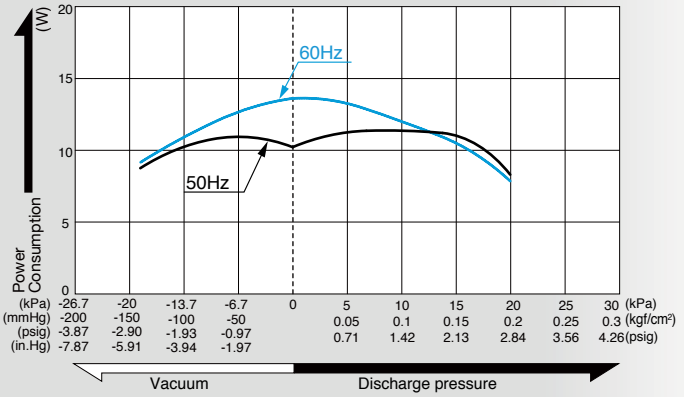

Specifications

Rated Pressure	10 kPa (0.1 kgf/cm²) 0.1 bar 1.42 psig	
Rated Airflow	15 L/min 0.53 cfm	
Maximum Pressure	20 kPa (0.2 kgf/cm²) 0.2 bar 2.84 psig	
Attainable Vacuum	-18.7 kPa (-140 mmHg) -186 mbar -5.51 in.Hg	
Rated Voltage	120 V AC	230 V AC
Power Consumption	11.5 W	
Rated Frequency	60 Hz	50 Hz
Rated Performance	5,000 hours	
Working Pressure Range	-18.7 kPa to 20 kPa (-140 mmHg to 0.2 kgf/cm²) -187 mbar to 0.2 bar -5.51 in.Hg to 2.84 psig	
Inlet	7.5 mm O.D. hose barb	
Outlet	7.5 mm O.D. hose barb	
Duty Cycle	Continuous	
Coil Insulation Class	E or its equivalent (JETL)	
Mounting Dimensions	66 (L) x 100 (W) mm 2-19/32" (L) x 3-15/16" (W)	
Weight	0.82 kg 1.81 Lbs	
Leadwire Length	300 mm 11-13/16"	

A UL approved model for 120V is available upon request.
Please read the page of "How to Use This Catalog" first for correct use of compressors and pumps.

Application Examples

Massage Devices

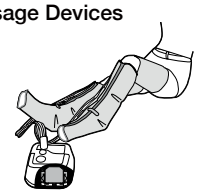

Bedsore Prevention Mattress

Dimensional Outline Drawing (Unit: mm)

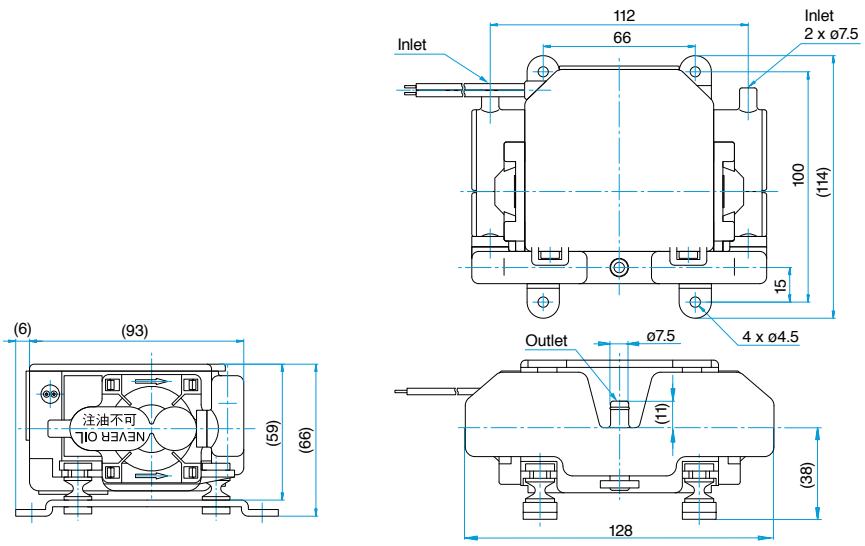

Compressor

Model VC0101E

Blower Type

120V 230V

Airflow & Power Consumption

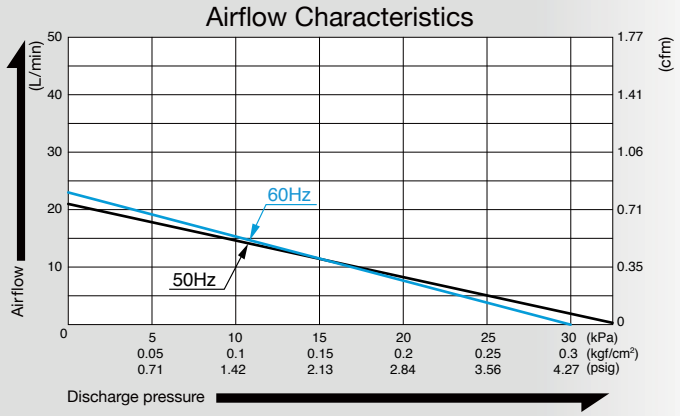

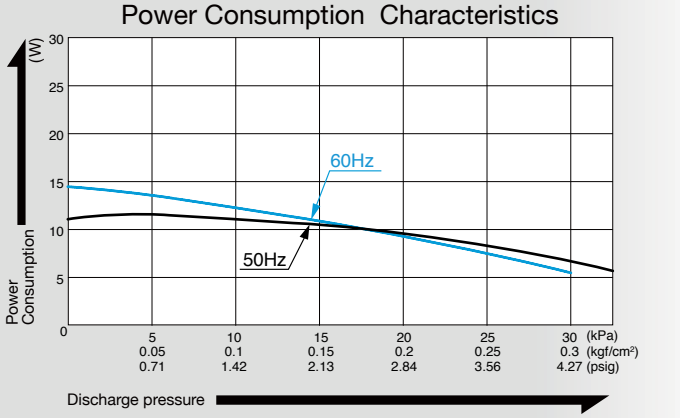

Specifications

Rated Pressure	10 kPa (0.1 kgf/cm²) 0.1 bar 1.42 psig	
Rated Airflow	15 L/min 0.53 cfm	
Maximum Pressure	20 kPa (0.2 kgf/cm²) 0.2 bar 2.84 psig	
Rated Voltage	120 V AC	230 V AC
Power Consumption	11.5 W	
Rated Frequency	60 Hz	50 Hz
Rated Performance	5,000 hours	
Working Pressure Range	0 to 20 kPa (0 to 0.2 kgf/cm²) 0 to 0.2 bar 0 to 2.84 psig	
Outlet	7.5 mm O.D. hose barb	
Duty Cycle	Continuous	
Coil Insulation Class	E or its equivalent (JETL)	
Mounting Dimensions	66 (L) x 100 (W) mm 2-19/32" (L) x 3-15/16" (W)	
Weight	0.82 kg 1.81 Lbs	
Leadwire Length	300 mm 11-13/16"	

A UL approved model for 120V is available upon request.
Please read the page of "How to Use This Catalog" first for correct use of compressors and pumps.

Application Examples

Massage Devices

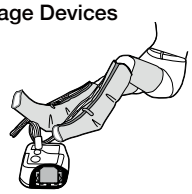

Bedsore Prevention Mattress

Dimensional Outline Drawing (Unit: mm)

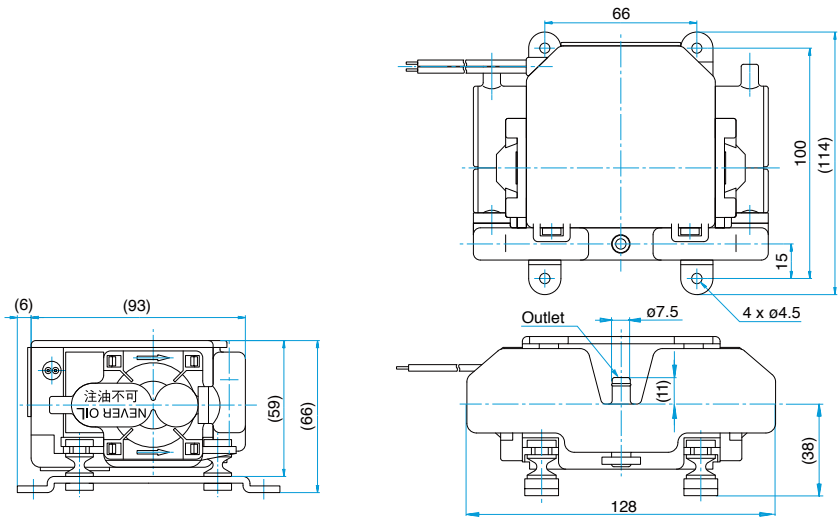

Compressor and Vacuum Pump

Model VC0101S

Dual Type

115V 230V

Airflow & Power Consumption

Airflow Characteristics

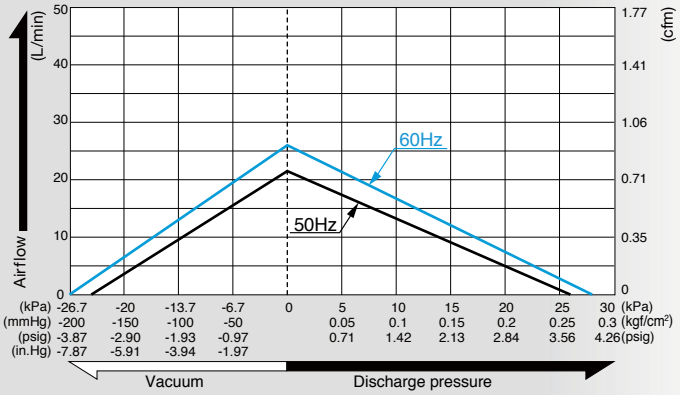

Power Consumption Characteristics

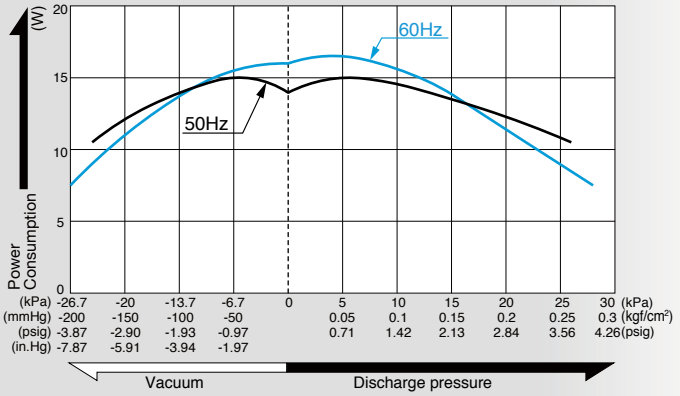

Specifications

Rated Pressure	5 kPa (0.05 kgf/cm²) 0.05 bar 0.71 psig	
Rated Airflow	15 L/min 0.53 cfm	
Maximum Pressure	26 kPa (0.26 kgf/cm²) 0.26 bar 3.70 psig	
Attainable Vacuum	-24 kPa (-180 mmHg) -240 mbar -7.09 in.Hg	
Rated Voltage	120 V AC *1	230 V AC
Power Consumption	15 W	
Rated Frequency	60 Hz	50 Hz
Rated Performance	5,000 hours	
Working Pressure Range	-24 kPa to 26 kPa (-180 mmHg to 0.26 kgf/cm²) -240 mbar to 0.26 bar -7.09 in.Hg to 3.70 psig	
Inlet	7.5 mm O.D. hose barb	
Outlet	7.5 mm O.D. hose barb	
Duty Cycle	60 minutes	
Coil Insulation Class	B or its equivalent (JETL)	
Mounting Dimensions	66 (L) x 100 (W) mm 2-19/32" (L) x 3-15/16" (W)	
Weight	0.82 kg 1.81 Lbs	
Leadwire Length	300 mm 11-13/16"	

*1: 120V AC UL version is unavailable.
Please read the page of "How to Use This Catalog" first for correct use of compressors and pumps.

Application Examples

Massage Devices

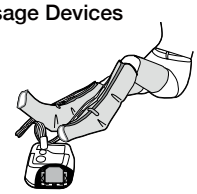

Bedsore Prevention Mattress

Dimensional Outline Drawing (Unit: mm)

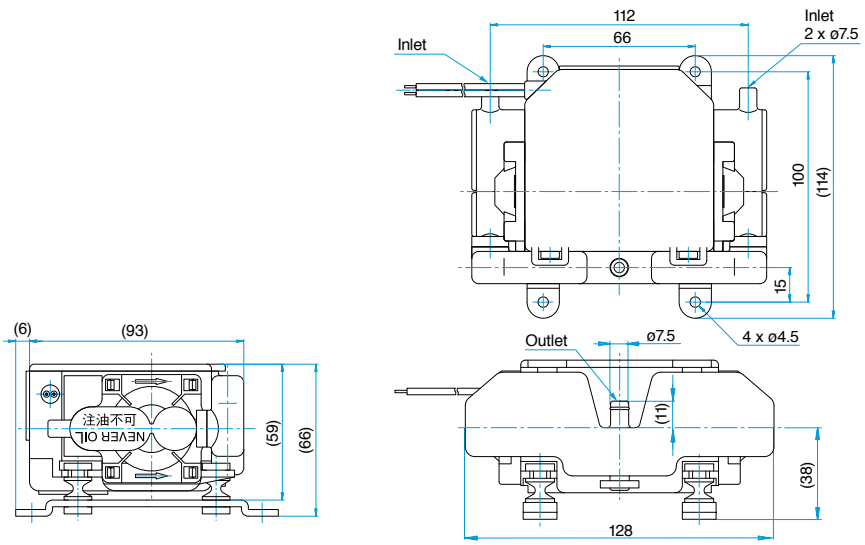

Compressor

Model VC0101S

Blower Type

120V 230V

Airflow & Power Consumption

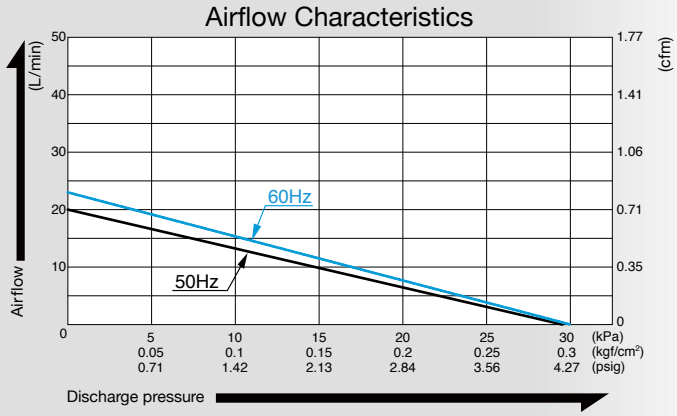

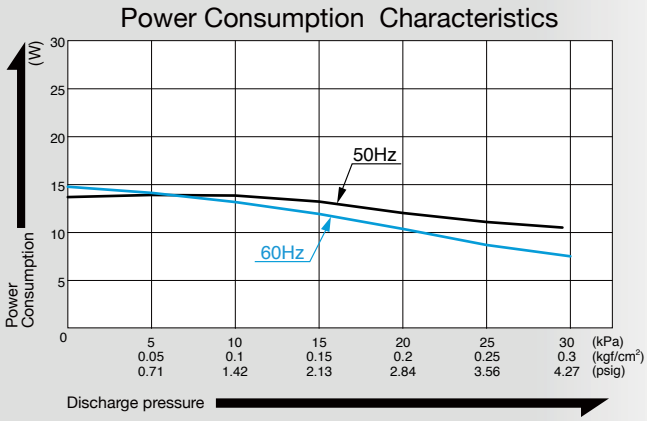

Specifications

Rated Pressure	5 kPa (0.05 kgf/cm²) 0.05 bar 0.71 psig	
Rated Airflow	15 L/min 0.53 cfm	
Maximum Pressure	26 kPa (0.26 kgf/cm²) 0.26 bar 3.70 psig	
Rated Voltage	120 V AC *1	230 V AC
Power Consumption	14 W	
Rated Frequency	60 Hz	50 Hz
Rated Performance	5,000 hours	
Working Pressure Range	0 to 26 kPa (0 to 0.26 kgf/cm²) 0 to 0.26 bar 0 to 3.70 psig	
Outlet	7.5 mm O.D. hose barb	
Duty Cycle	60 minutes	
Coil Insulation Class	B or its equivalent (JETL)	
Mounting Dimensions	66 (L) x 100 (W) mm 2-19/32" (L) x 3-15/16" (W)	
Weight	0.83 kg 1.81 Lbs	
Leadwire Length	300 mm 11-13/16"	

*1: Non-UL product.
Please read the page of "How to Use This Catalog" first for correct use of compressors and pumps.

Application Examples

Massage Devices

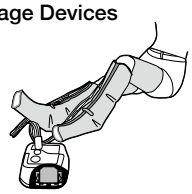

Bedsore Prevention Mattress

Dimensional Outline Drawing (Unit: mm)

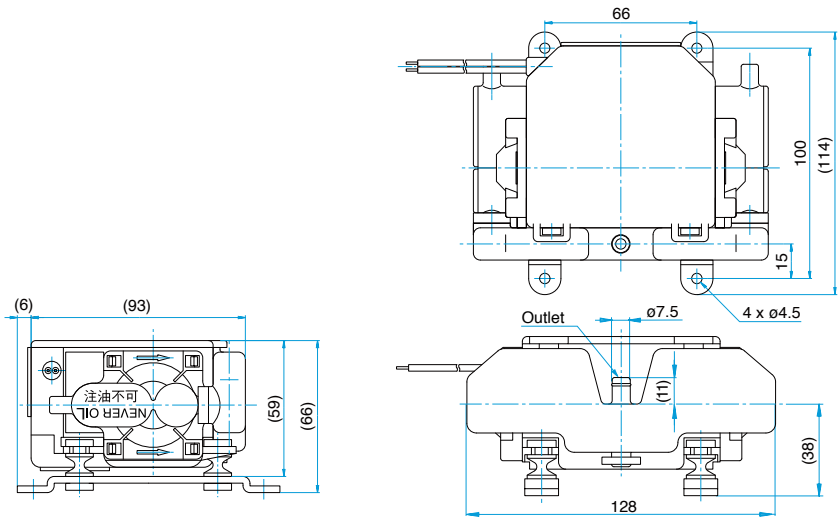

Compressor and Vacuum Pump

Model VC0201

Dual Type

120V 230V

Airflow & Power Consumption

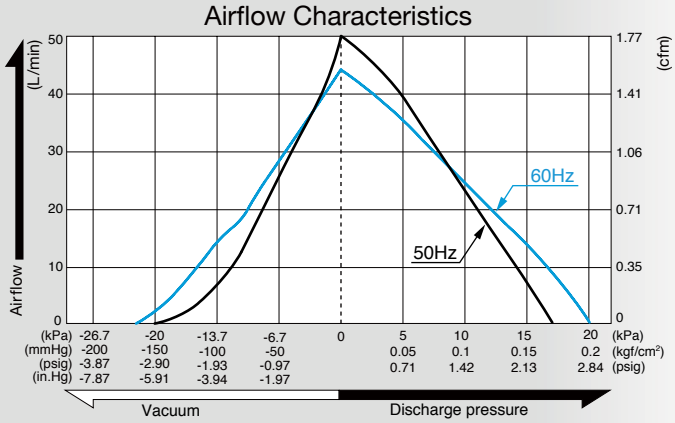

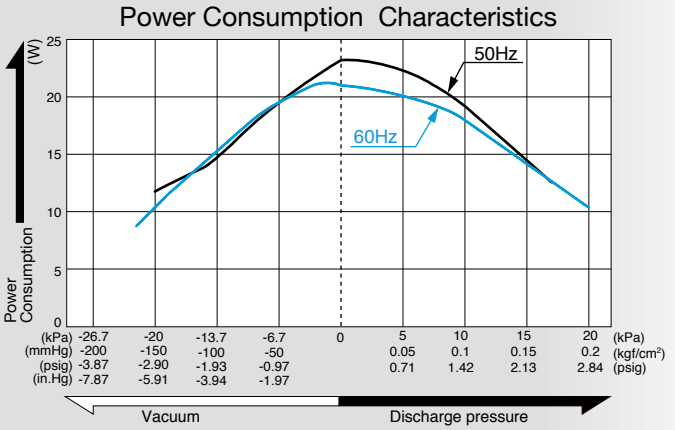

Specifications

Rated Pressure	10 kPa (0.1 kgf/cm²) 0.1 bar 1.42 psig	
Rated Airflow	20 L/min 0.71 cfm	
Maximum Pressure	18 kPa (0.18 kgf/cm²) 0.18 bar 2.56 psig	
Attainable Vacuum	-18.7 kPa (-140 mmHg) -187 mbar -5.51 in.Hg	
Rated Voltage	120 V AC	230 V AC
Power Consumption	18 W	19 W
Rated Frequency	60 Hz	50 Hz
Rated Performance	10,000 hours	
Working Pressure Range	-18.7 kPa to 18 kPa (-140 mmHg to 0.18 kgf/cm2) -187 mbar to 0.18 bar -5.51 in.Hg to 2.56 psig	
Inlet	8.5 mm O.D. hose barb	
Outlet	8.5 mm O.D. hose barb	
Duty Cycle	Continuous	
Coil Insulation Class	A for 120V or its equivalent	E for 230V or its equivalent
Mounting Dimensions	100 (L) x 85 (W) mm 3-15/16" (L) x 3-11/32" (W)	
Weight	1.8 kg 4 Lbs	
Leadwire Length	200 mm 7-7/8"	

Please read the page of "How to Use This Catalog" first for correct use of compressors and pumps.

Application Examples

Medical Cup Suction

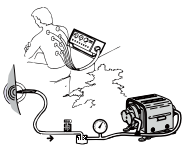

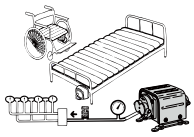

Bedsore Prevention Mattress

Solder Fume Suction

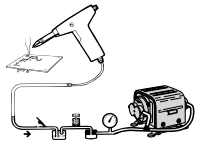

Dimensional Outline Drawing (Unit: mm)

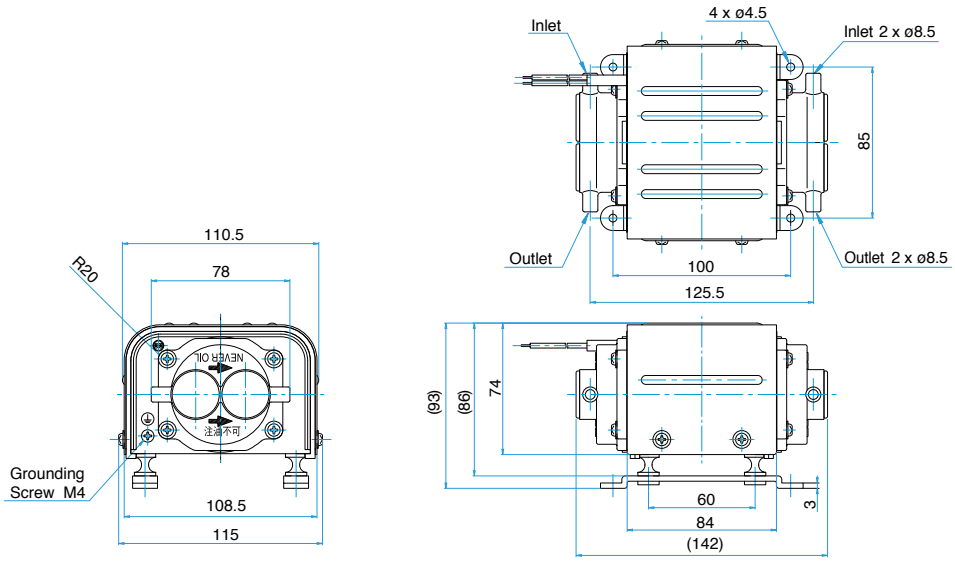

Compressor

Model VC0201

Blower Type

120V 230V

Airflow & Power Consumption

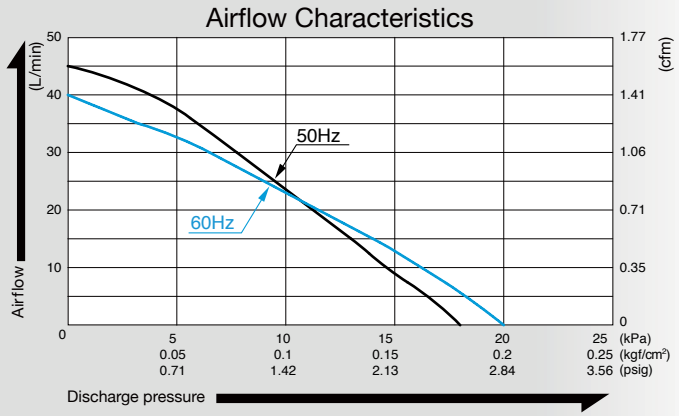

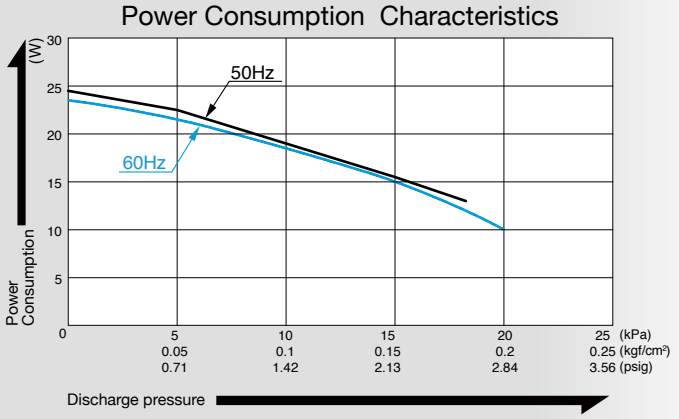

Specifications

Rated Pressure	10 kPa (0.1 kgf/cm²) 0.1 bar 1.42 psig	
Rated Airflow	20 L/min 0.71 cfm	
Maximum Pressure	18 kPa (0.18 kgf/cm²) 0.18 bar 2.56 psig	
Rated Voltage	120 V AC	230 V AC
Power Consumption	18 W	19 W
Rated Frequency	60 Hz	50 Hz
Rated Performance	10,000 hours	
Working Pressure Range	0 to 18 kPa (0 to 0.18 kgf/cm²) 0 to 0.18 bar 0 to 2.56 psig	
Outlet	8.5 mm O.D. hose barb	
Duty Cycle	Continuous	
Coil Insulation Class	A for 120V or its equivalent	B for 230V or its equivalent
Mounting Dimensions	100 (L) x 85 (W) mm 3-15/16" (L) x 3-11/32" (W)	
Weight	1.8 kg 4 Lbs	
Leadwire Length	200 mm 7-7/8"	

Please read the page of "How to Use This Catalog" first for correct use of compressors and pumps.

Application Examples

Medical Cup Suction

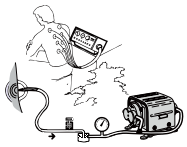

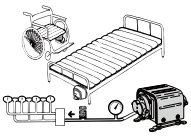

Bedsore Prevention Mattress

Solder Fume Suction

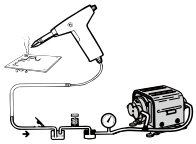

Dimensional Outline Drawing (Unit: mm)

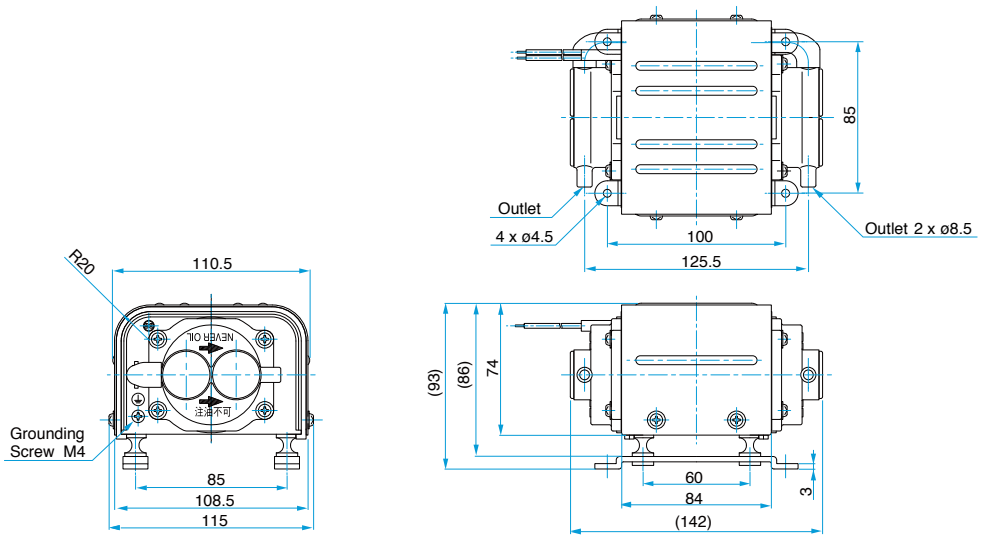

Compressor and Vacuum Pump

Model VC0301

Dual Type

120V 230V

Airflow & Power Consumption

Airflow Characteristics

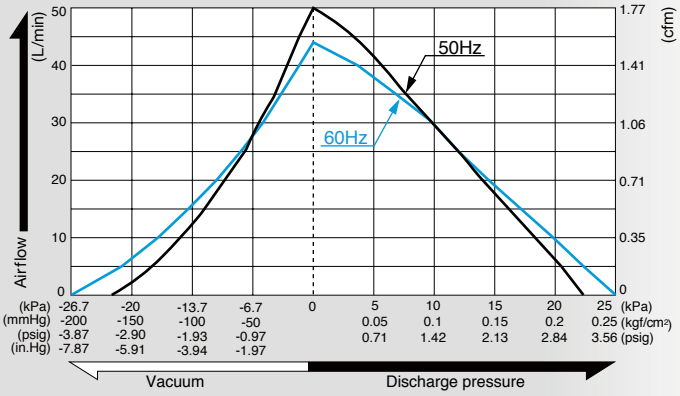

Power Consumption Characteristics

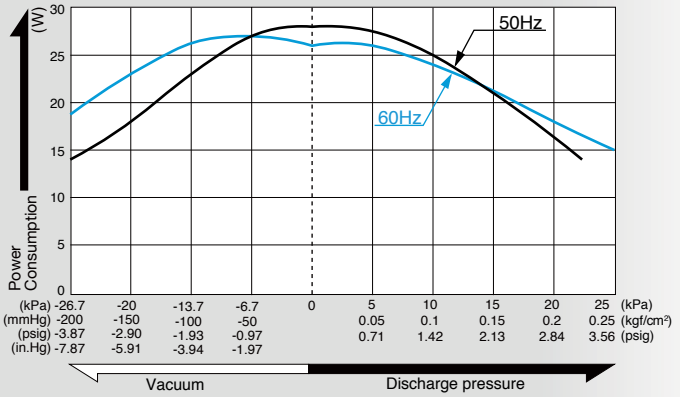

Specifications

Rated Pressure	10 kPa (0.1 kgf/cm²) 0.1 bar 1.42 psig	
Rated Airflow	25 L/min 0.88 cfm	
Maximum Pressure	20 kPa (0.2 kgf/cm²) 0.2 bar 2.84 psig	
Attainable Vacuum	-21.3 kPa (-160 mmHg) -213 mbar -6.3 in.Hg	
Rated Voltage	120 V AC	230 V AC
Power Consumption	24 W	25 W
Rated Frequency	60 Hz	50 Hz
Rated Performance	10,000 hours	
Working Pressure Range	-21.3 kPa to 20 kPa (-160 mmHg to 0.2 kgf/cm²) -213 mbar to 0.2 bar -6.3 in.Hg to 2.84 psig	
Inlet	8.5 mm O.D. hose barb	
Outlet	8.5 mm O.D. hose barb	
Duty Cycle	Continuous	
Coil Insulation Class	A for 120V or its equivalent	E for 230V or its equivalent
Mounting Dimensions	100 (L) x 85 (W) mm 3-15/16" (L) x 3-11/32" (W)	
Weight	1.8 kg 4 Lbs	
Leadwire Length	200 mm 7-7/8"	

Please read the page of "How to Use This Catalog" first for correct use of compressors and pumps.

Application Examples

Medical Cup Suction

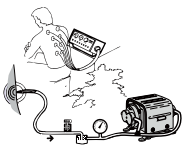

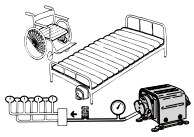

Bedsore Prevention Mattress

Solder Fume Suction

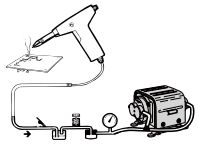

Dimensional Outline Drawing (Unit: mm)

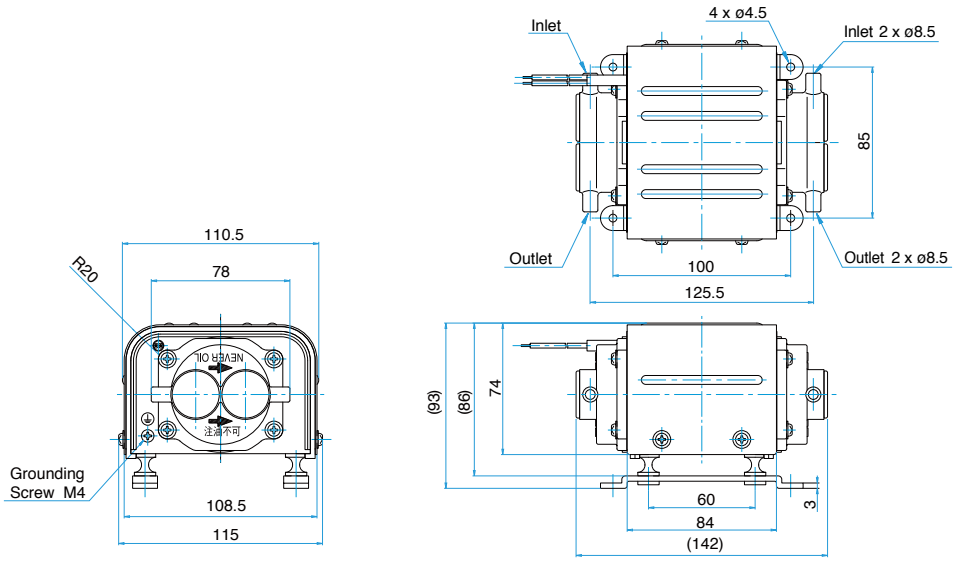

Compressor

Model VC0301

Blower Type

120V 230V

Airflow & Power Consumption

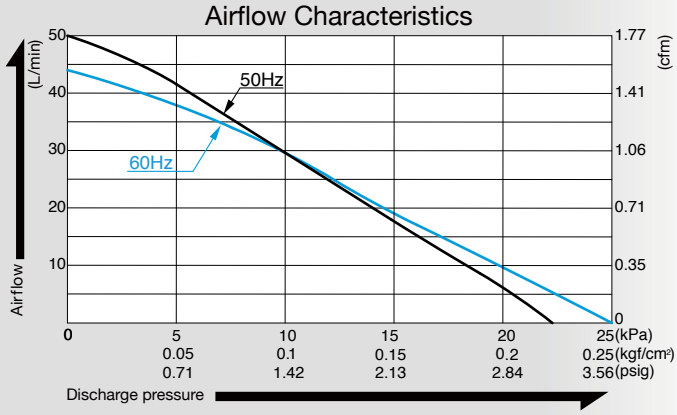

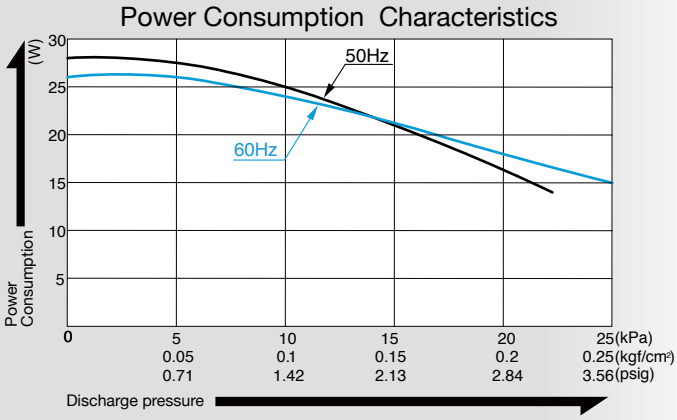

Specifications

Rated Pressure	10 kPa (0.1 kgf/cm²) 0.1 bar 1.42 psig	
Rated Airflow	25 L/min 0.88 cfm	
Maximum Pressure	20 kPa (0.2 kgf/cm²) 0.2 bar 2.84 psig	
Rated Voltage	120 V AC	230 V AC
Power Consumption	24 W	25 W
Rated Frequency	60 Hz	50 Hz
Rated Performance	10,000 hours	
Working Pressure Range	0 to 20 kPa (0 to 0.2 kgf/cm²) 0 to 0.2 bar 0 to 2.84 psig	
Outlet	8.5 mm O.D. hose barb	
Duty Cycle	Continuous	
Coil Insulation Class	A for 120V or its equivalent	E for 230V or its equivalent
Mounting Dimensions	100 (L) x 85 (W) mm 3-15/16" (L) x 3-11/32" (W)	
Weight	1.8 kg 4 Lbs	
Leadwire Length	200 mm 7-7/8"	

Please read the page of "How to Use This Catalog" first for correct use of compressors and pumps.

Application Examples

Medical Cup Suction

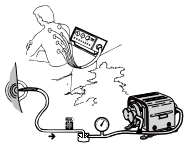

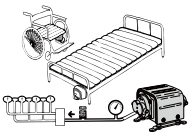

Bedsore Prevention Mattress

Solder Fume Suction

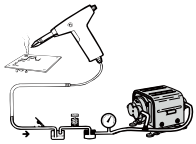

Dimensional Outline Drawing (Unit: mm)

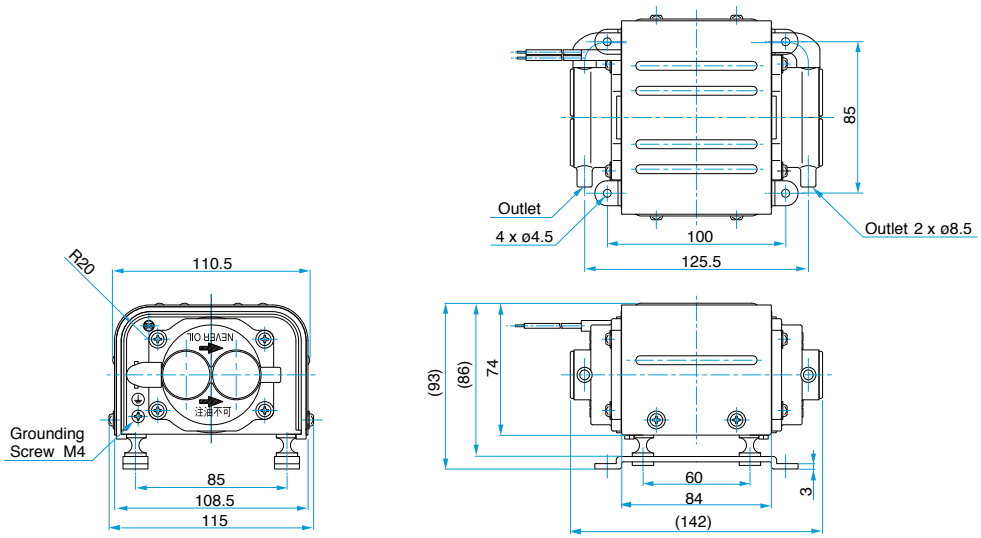

Compressor and Vacuum Pump

Model VC0201B

Dual Type

120V 230V

Airflow & Power Consumption

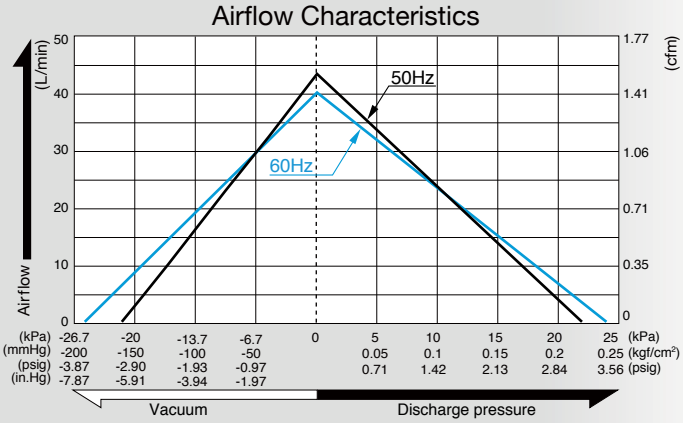

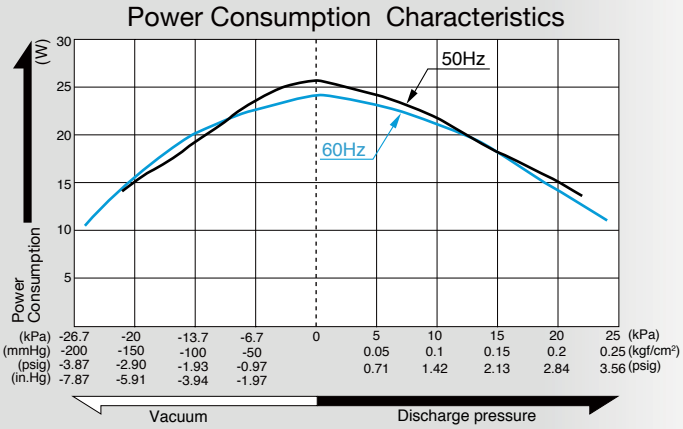

Specifications

Rated Pressure	10 kPa (0.1 kgf/cm²) 0.1 bar 1.42 psig	
Rated Airflow	20 L/min 0.71 cfm	
Maximum Pressure	18 kPa (0.18 kgf/cm²) 0.18 bar 2.56 psig	
Attainable Vacuum	-18.7 kPa (-140 mmHg) -187 mbar -5.51 in.Hg	
Rated Voltage	120 V AC	230 V AC
Power Consumption	21 W	
Rated Frequency	60 Hz	50 Hz
Rated Performance	10,000 hours	
Working Pressure Range	-18.7 kPa to 18 kPa (-140 mmHg to 0.18 kgf/cm²) -187 mbar to 0.18 bar -5.51 in.Hg to 2.56 psig	
Inlet	10.5 mm O.D. hose barb	
Outlet	8.5 mm O.D. hose barb	
Duty Cycle	Continuous	
Coil Insulation Class	E or its equivalanet (JETL) and A for UL	
Mounting Dimensions	125 (L) x 56 (W) mm 4-59/64" (L) x 2-13/64" (W)	
Weight	1.7 kg 3.7 Lbs	
Leadwire Length	300 mm 11-13/16"	

Please read the page of "How to Use This Catalog" first for correct use of compressors and pumps.

Application Examples

Bedsore Prevention Mattress

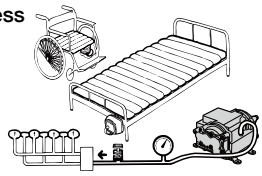

Solder Fume Suction

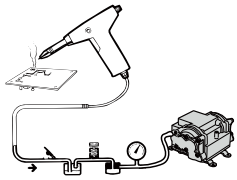

Dimensional Outline Drawing (Unit: mm)

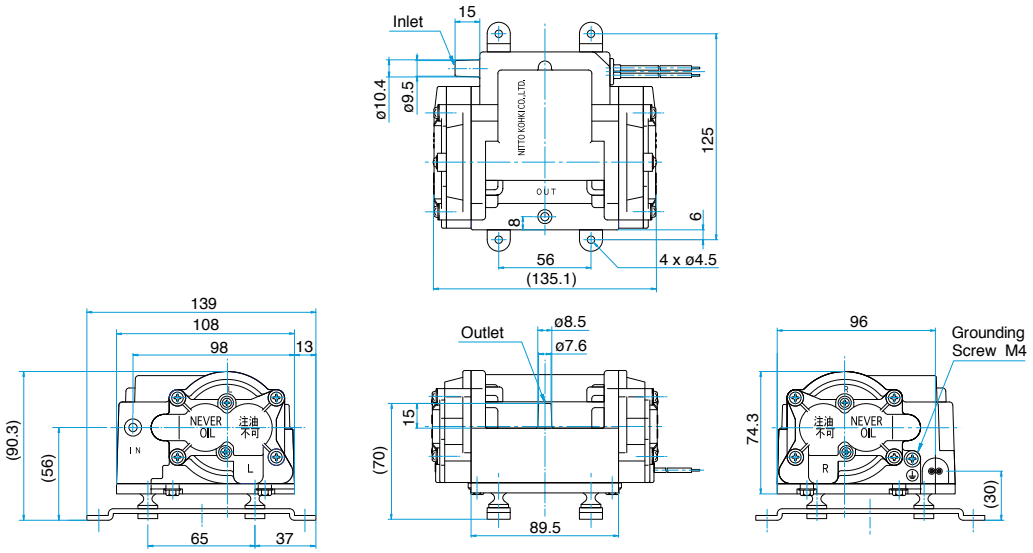

Compressor

Model VC0201B

Blower Type

CE 230V

Airflow & Power Consumption

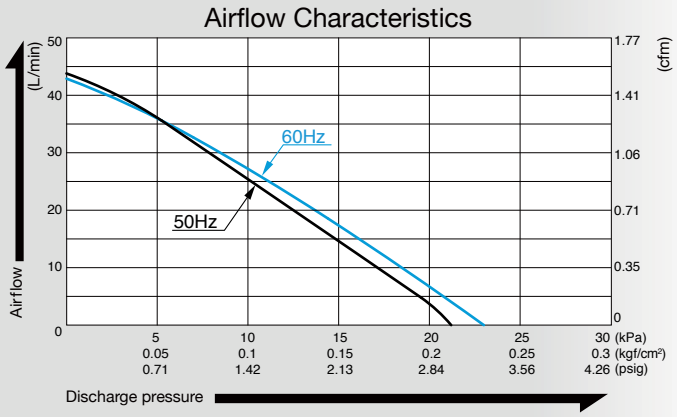

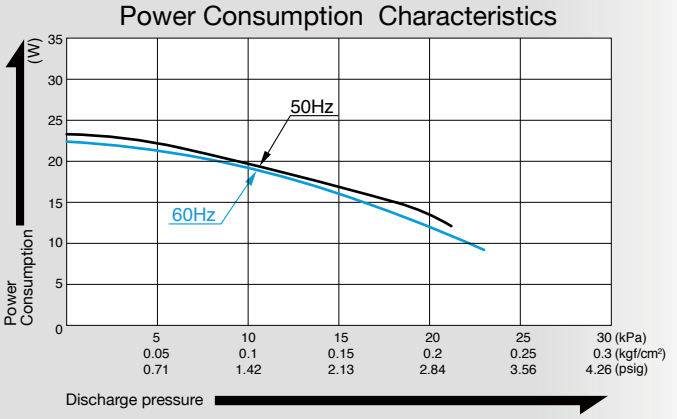

Specifications

Rated Pressure	10 kPa (0.1 kgf/cm²) 0.1 bar 1.42 psig	
Rated Airflow	20 L/min 0.71 cfm	
Maximum Pressure	18 kPa (0.18 kgf/cm²) 0.18 bar 2.56 psig	
Rated Voltage	120 V AC	230 V AC
Power Consumption	21 W	
Rated Frequency	60 Hz	50 Hz
Rated Performance	10,000 hours	
Working Pressure Range	0 to 18 kPa (0 to 0.18 kgf/cm²) 0 to 0.18 bar 0 to 2.56 psig	
Outlet	8.5 mm O.D. hose barb	
Duty Cycle	Continuous	
Coil Insulation Class	E or its equivalanet (JETL) and A for UL	
Mounting Dimensions	125 (L) x 56 (W) mm 4-59/64" (L) x 2-13/64" (W)	
Weight	1.7 kg 3.7 Lbs	
Leadwire Length	300 mm 11-13/16"	

Please read the page of "How to Use This Catalog" first for correct use of compressors and pumps.

Application Examples

Bedsore Prevention Mattress

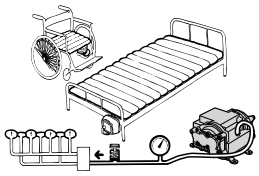

Dimensional Outline Drawing (Unit: mm)

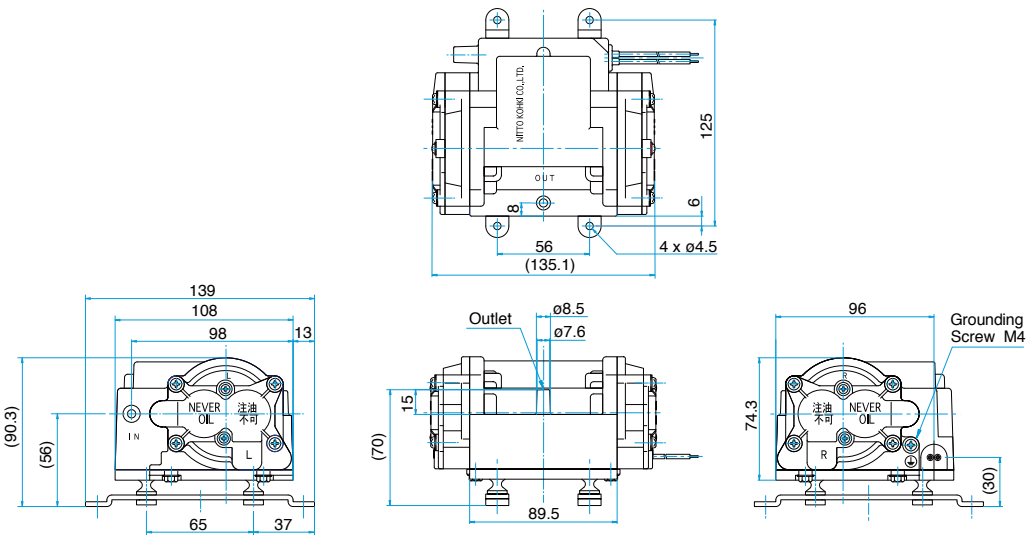

Compressor and Vacuum Pump

Model VC0301B

Dual Type

120V 230V

Airflow & Power Consumption

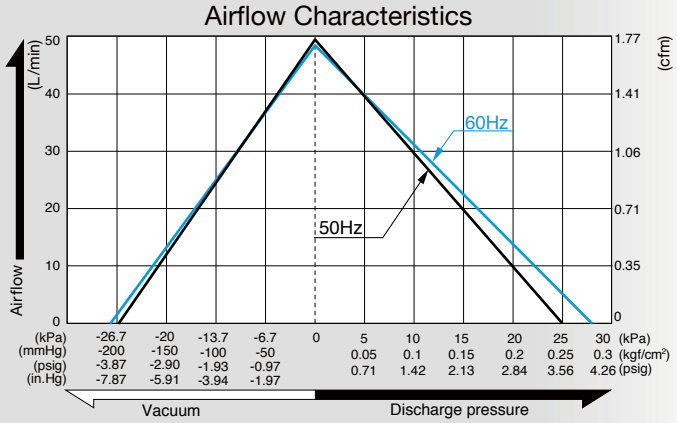

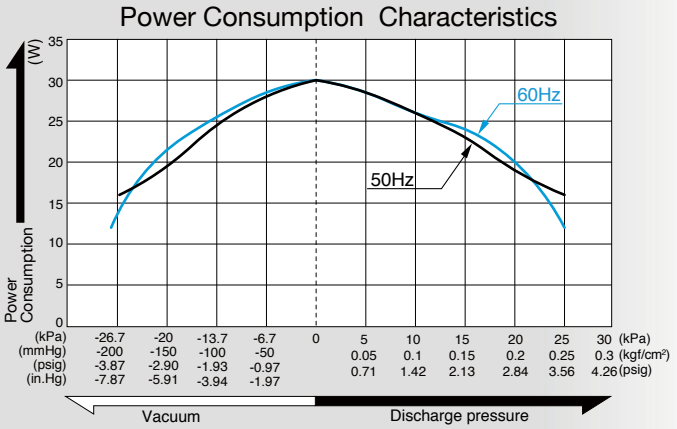

Specifications

Rated Pressure	10 kPa (0.1 kgf/cm²) 0.1 bar 1.42 psig	
Rated Airflow	25 L/min 0.88 cfm	
Maximum Pressure	20 kPa (0.2 kgf/cm²) 0.2 bar 2.84 psig	
Attainable Vacuum	-21.3 kPa (-160 mmHg) -213 mbar -6.3 in.Hg	
Rated Voltage	120 V AC	230 V AC
Power Consumption	27 W	
Rated Frequency	60 Hz	50 Hz
Rated Performance	10,000 hours	
Working Pressure Range	-21.3 kPa to 20 kPa (-160 mmHg to 0.2 kgf/cm²) -213 mbar to 0.2 bar -6.3 in.Hg to 2.84 psig	
Inlet	10.5 mm O.D. hose barb	
Outlet	8.5 mm O.D. hose barb	
Duty Cycle	Continuous	
Coil Insulation Class	B or its equivalent	
Mounting Dimensions	125 (L) x 56 (W) mm 4-59/64" (L) x 2-13/64" (W)	
Weight	1.7 kg 3.7 Lbs	
Leadwire Length	300 mm 11-13/16"	

Please read the page of "How to Use This Catalog" first for correct use of compressors and pumps.

Application Examples

Bedsore Prevention Mattress

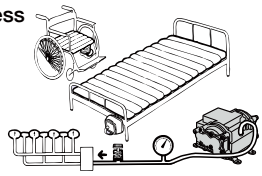

Solder Fume Suction

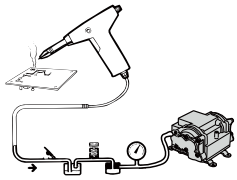

Dimensional Outline Drawing (Unit: mm)

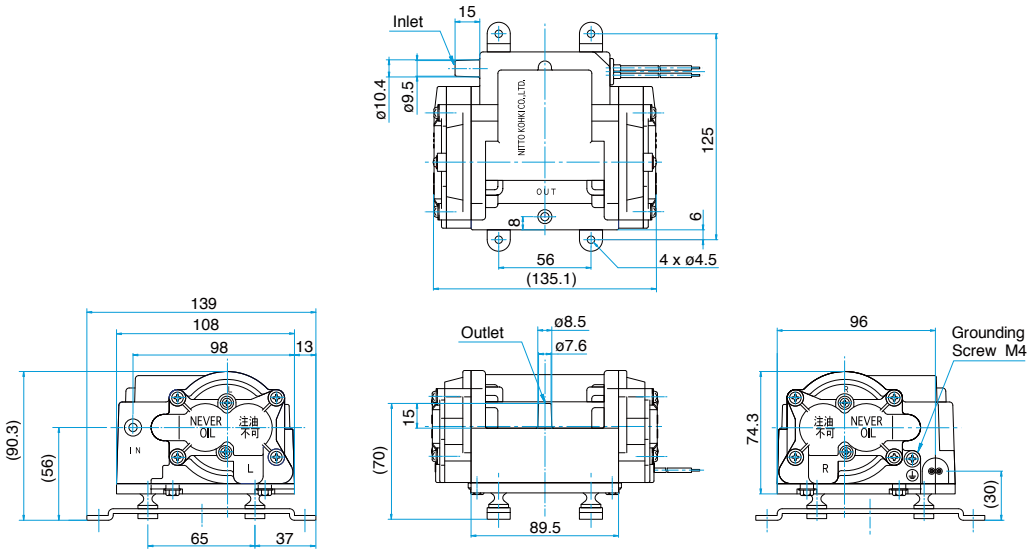

Compressor

Model VC0301B

Blower Type

CE 230V

Airflow & Power Consumption

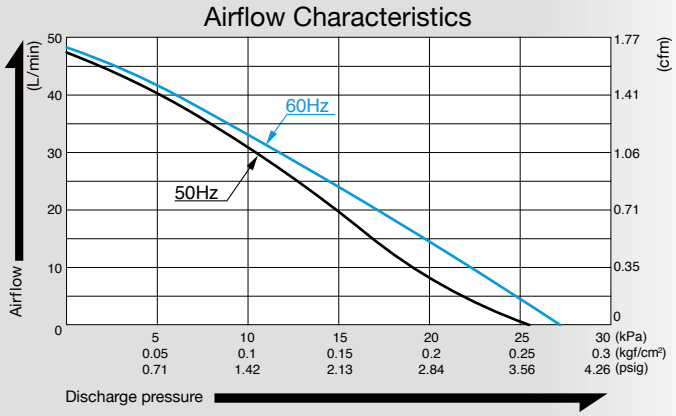

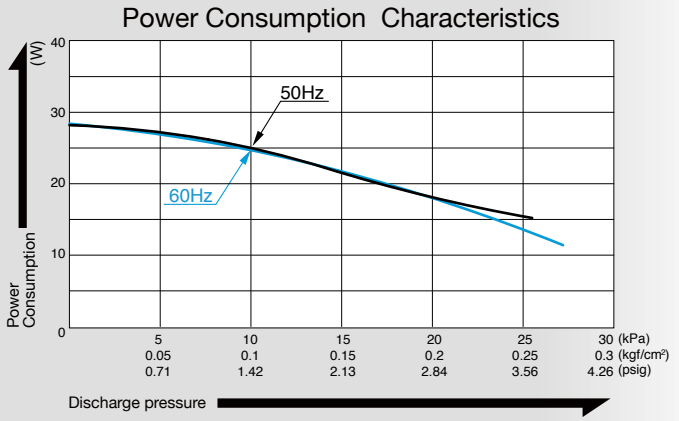

Specifications

Rated Pressure	10 kPa (0.1 kgf/cm²) 0.1 bar 1.42 psig	
Rated Airflow	25 L/min 0.88 cfm	
Maximum Pressure	20 kPa (0.2 kgf/cm²) 0.2 bar 2.84 psig	
Rated Voltage	120 V AC	230 V AC
Power Consumption	27 W	
Rated Frequency	60 Hz	50 Hz
Rated Performance	10,000 hours	
Working Pressure Range	0 to 20 kPa (0 to 0.2 kgf/cm²) 0 to 0.2 bar 0 to 2.84 psig	
Outlet	8.5 mm O.D. hose barb	
Duty Cycle	Continuous	
Coil Insulation Class	B or its equivalent	
Mounting Dimensions	125 (L) x 56 (W) mm 4-59/64" (L) x 2-13/64" (W)	
Weight	1.7 kg 3.7 Lbs	
Leadwire Length	300 mm 11-13/16"	

Please read the page of "How to Use This Catalog" first for correct use of compressors and pumps.

Application Examples

Bedsore Prevention Mattress

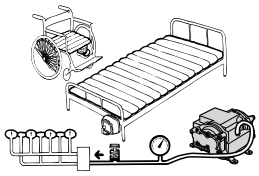

Dimensional Outline Drawing (Unit: mm)

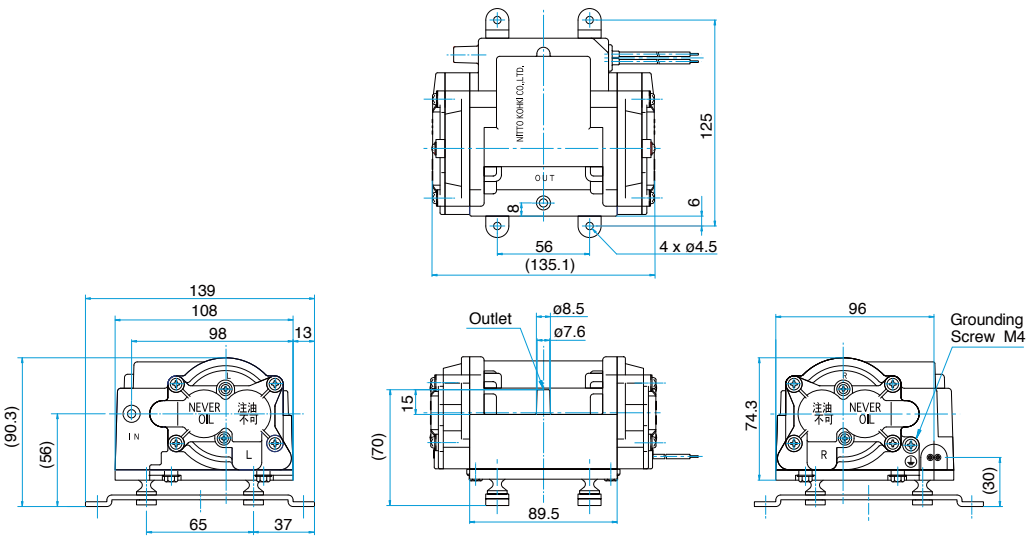

Vacuum Pump

Model VCK0120

Airflow & Power Consumption

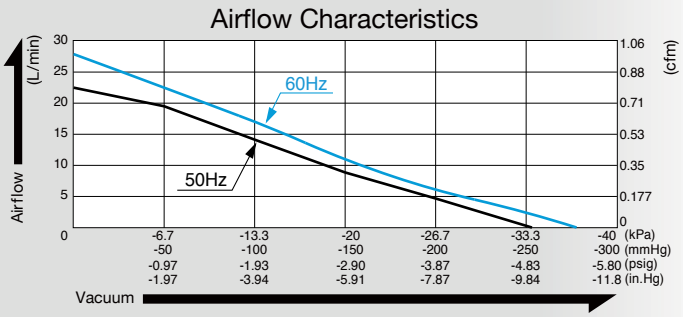

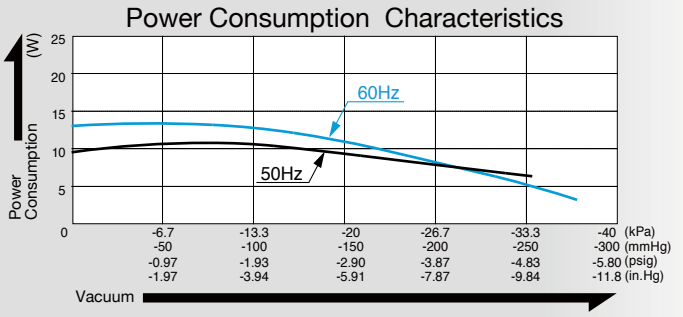

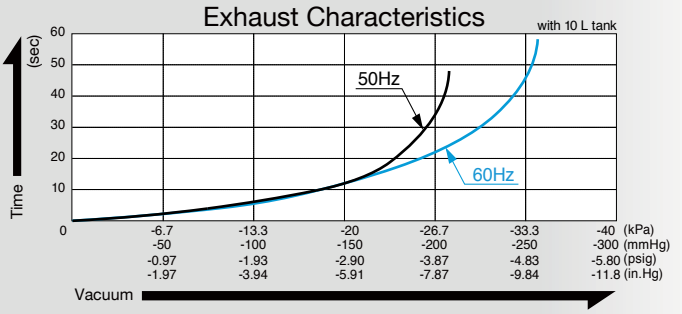

Specifications

Attainable Vacuum	-26.7 kPa (-200 mmHg) - 267 mbar - 7.87 in.Hg	
Free Air Displacement	18 L/min 0.64 cfm	
Rated Voltage	120 V AC	230 V AC
Power Consumption	14 W	11 W
Rated Frequency	60 Hz	50 Hz
Rated Performance	5,000 hours	
Inlet	ISO Rc 1/8	
Outlet	ISO Rc 1/8	
Duty Cycle	Continuous	
Coil Insulation Class	B or its equivalent	
Mounting Dimensions	152 (L) x 128 (W) mm 5-63/64" (L) x 5-3/64" (W)	
Weight	1.9 kg 4.2 Lbs	
Leadwire Length	300 mm 11-13/16"	

Please read the page of "How to Use This Catalog" first for correct use of compressors and pumps.

Application Examples

Medical Cup Suction

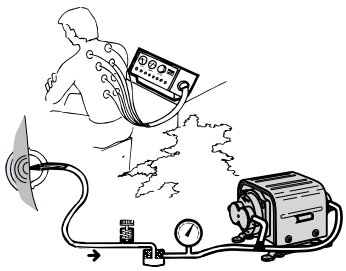

Dimensional Outline Drawing (Unit: mm)

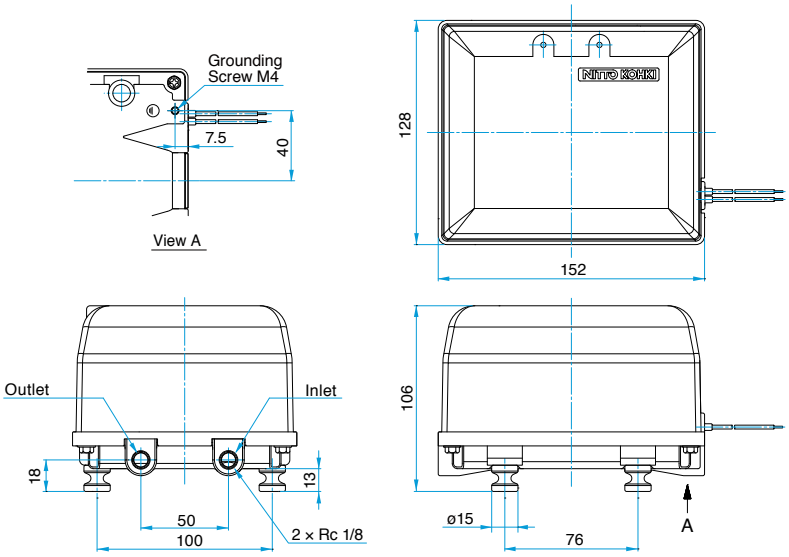

DIAPHRAGM PUMP
PISTON PUMP

DC
Diaphragm Pump
Piston Pump

Page

Compressor and Vacuum Pump

Model DP0125

Brush DC Motor **12 V DC**

Airflow & Power Consumption

Airflow Characteristics

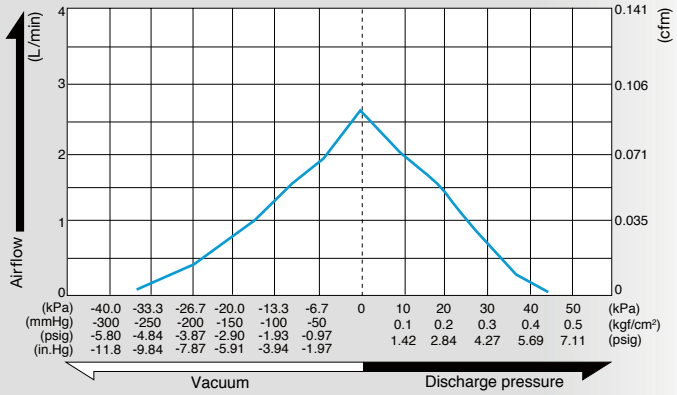

Current Characteristics

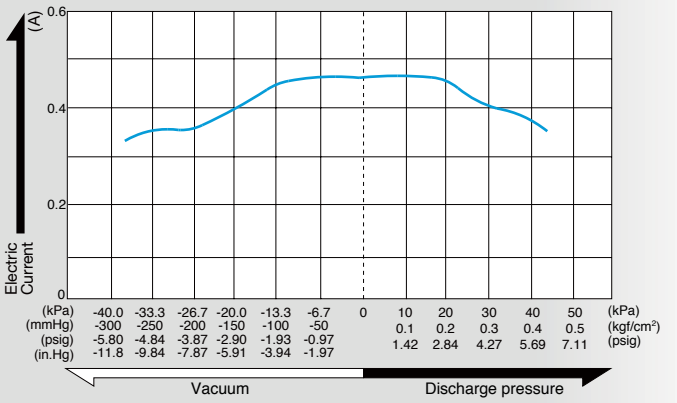

Specifications

Attainable Vacuum	-33.3 kPa (-250 mmHg) -333 mbar - 9.84 in.Hg
Free Air Displacement	2.5 L/min 0.088 cfm
Rated Voltage	12 V DC
Maximum Pressure	30 kPa (0.3 kgf/cm²) 0.3 bar 4.27 psig
Maximum Current	0.5 A
Duty Cycle	Continuous
Rated Performance	200 hours
Inlet	3 mm O.D. straight barb
Outlet	3 mm O.D. straight barb
Coil Insulation Class	E or its equivalent (JETL)
Mounting Dimensions	32 (L) x 32.5 (W) mm 1-17/64" (L) x 1-9/32" (W)
Weight	0.08 kg 0.18 Lbs.

Please read the page of "How to Use This Catalog" first for correct use of compressors and pumps.

Application Examples

Vacuum Sucking Pen

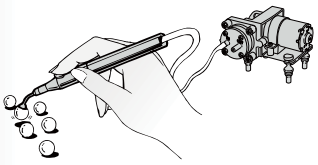

Blood Pressure Tester

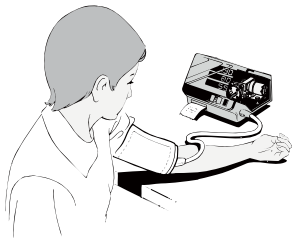

Dimensional Outline Drawing (Unit: mm)

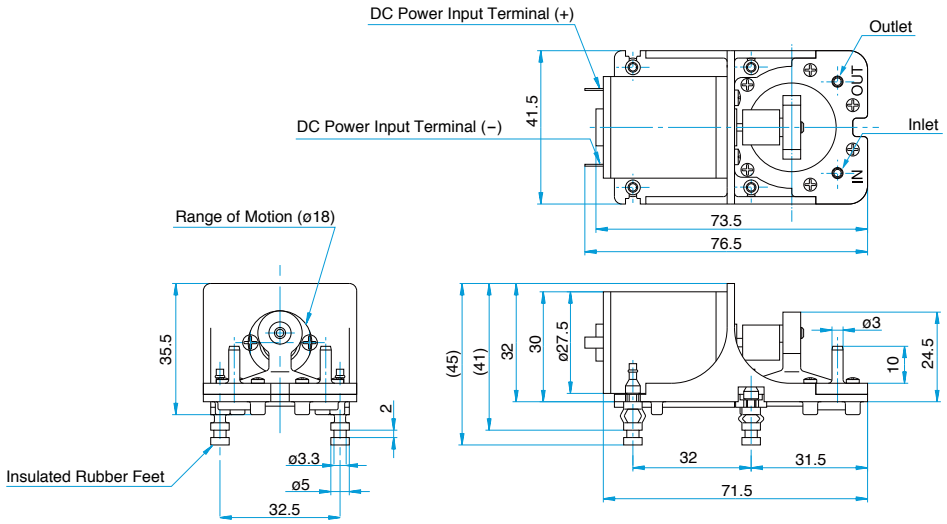

Compressor and Vacuum Pump

Model DP0140

Brush DC Motor **12 V DC**

Airflow & Power Consumption

Airflow Characteristics

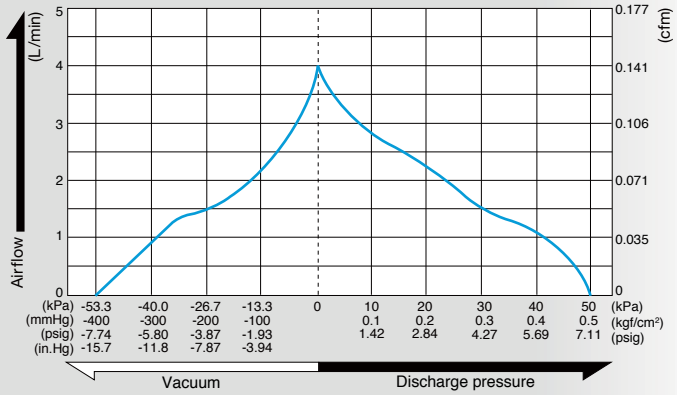

Current Characteristics

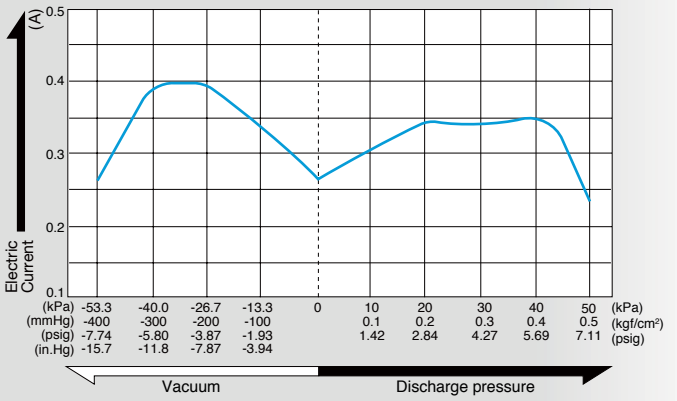

Specifications

Attainable Vacuum	-53.3 kPa (-400 mmHg) -533 mbar -15.7 in.Hg
Free Air Displacement	4.0 L/min 0.141 cfm
Rated Voltage	12 V DC
Maximum Pressure	50 kPa (0.5 kgf/cm^2) 0.5 bar 7.11 psig
Maximum Current	0.5 A
Duty Cycle	Continuous
Rated Performance	500 hours
Inlet	5 mm O.D. straight barb
Outlet	5 mm O.D. straight barb
Coil Insulation Class	E or its equivalent (JETL)
Mounting Dimensions	52 (L) x 36 (W) mm 2-3/64" (L) x 1-27/64" (W)
Weight	0.19 kg 0.42 Lbs.

Please read the page of "How to Use This Catalog" first for correct use of compressors and pumps.

Application Examples

Vacuum Sucking Pen

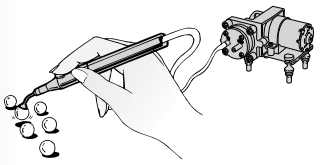

Blood Pressure Tester

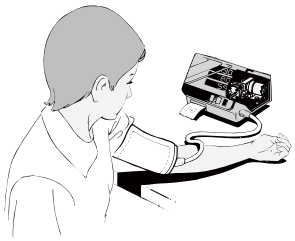

Dimensional Outline Drawing (Unit: mm)

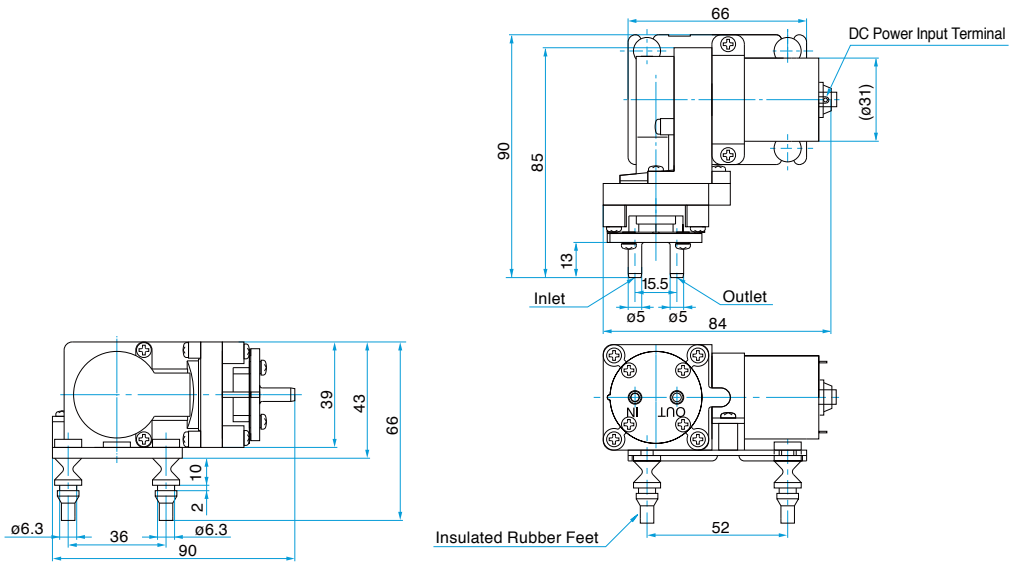

Compressor and Vacuum Pump

Model DP0102

Brushless DC Motor **12 V DC**

Airflow & Power Consumption

Airflow Characteristics

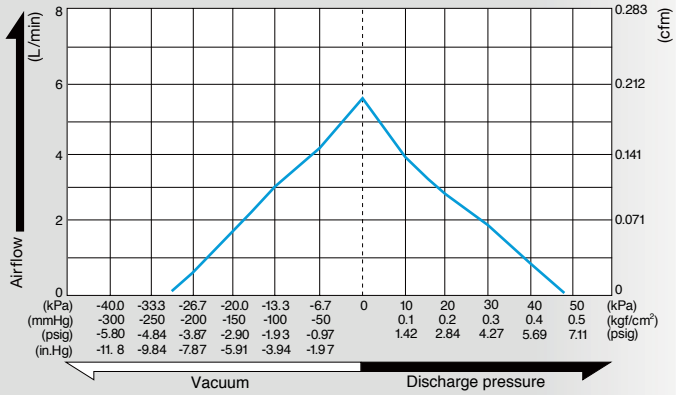

Current Characteristics

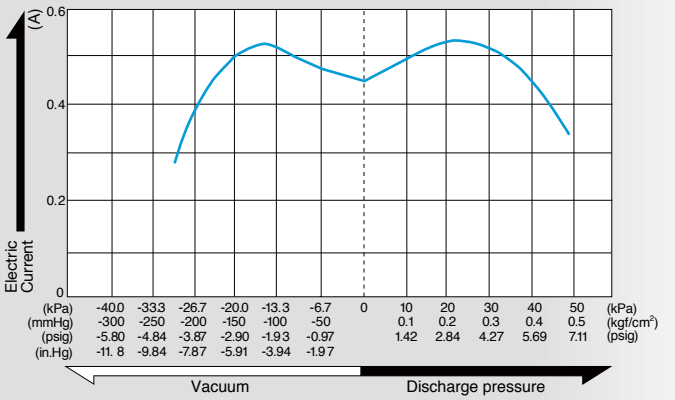

Specifications

Attainable Vacuum	-26.7 kPa (-200 mmHg) -267 mbar -7.87 in.Hg
Free Air Displacement	5.0 L/min 0.177 cfm
Rated Voltage	12 V DC
Maximum Pressure	45 kPa (0.45 kgf/cm²) 0.45 bar 6.4 psig
Maximum Current	0.7 A
Duty Cycle	Continuous
Working Pressure Range	-26.7 kPa to 45 kPa (-200 mmHg to 0.45 kgf/cm²) -267 mbar to 0.45 bar -7.87 in.Hg to 6.4 psig
Rated Performance	5,000 hours
Inlet	6 mm O.D. straight barb
Outlet	6 mm O.D. straight barb
Coil Insulation Class	E or its equivalent (JETL)
Mounting Dimensions	50 (L) x 30 (W) mm 1-31/32" (L) x 1-3/16" (W)
Weight	0.25 kg 0.55 Lbs.
Leadwire Length	400 mm 15-3/4"

Please read the page of "How to Use This Catalog" first for correct use of compressors and pumps.

Application Examples

Endoscopes

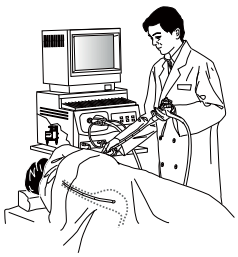

Removal of micromachining chips

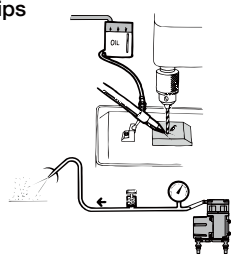

Dimensional Outline Drawing (Unit: mm)

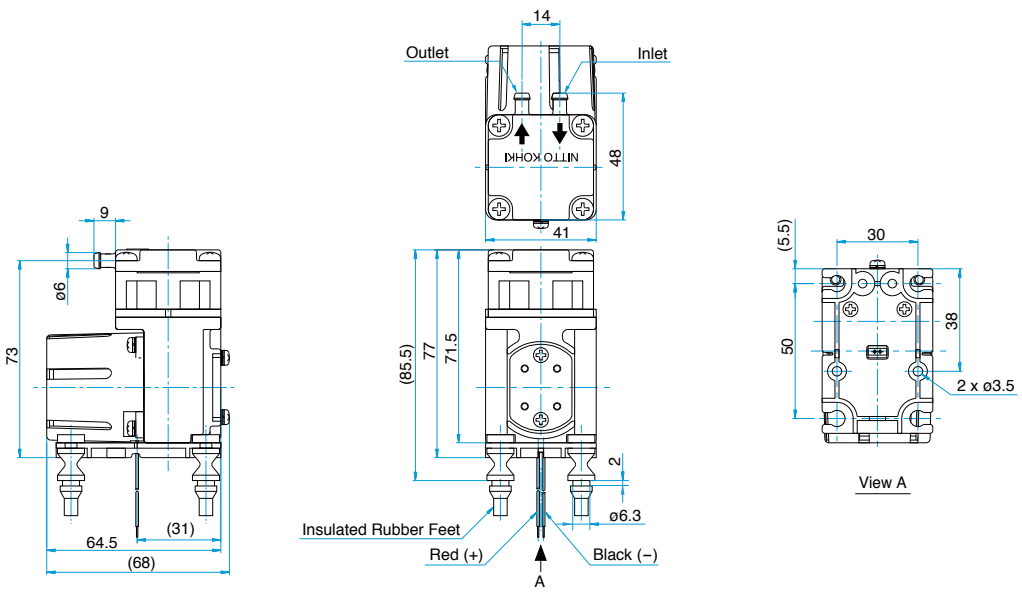

Compressor and Vacuum

Model DP0102S

Brushless DC Motor **24 V DC**

Airflow & Power Consumption

Airflow Characteristics

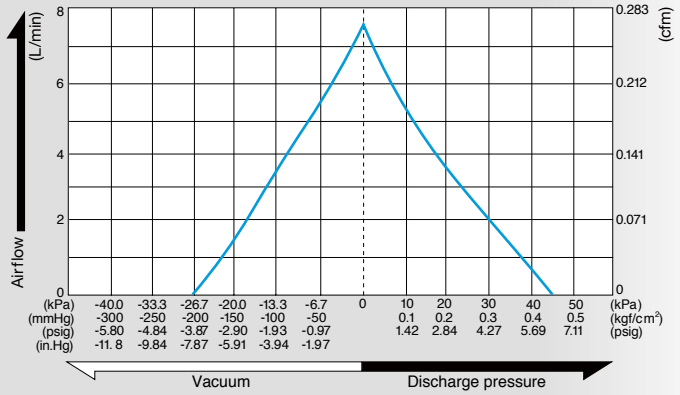

Current Characteristics

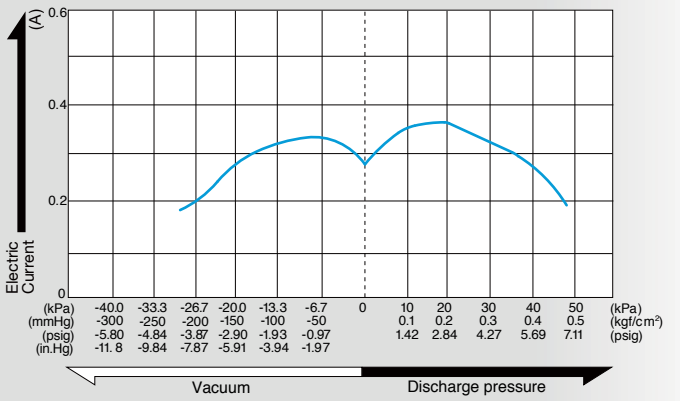

Specifications

Attainable Vacuum	-26.7 kPa (-200 mmHg) -267 mbar -7.87 in.Hg
Free Air Displacement	7.0 L/min 0.247 cfm
Rated Voltage	24 V DC
Maximum Pressure	45 kPa (0.45 kgf/cm²) 0.45 bar 6.4 psig
Maximum Current	0.5 A
Duty Cycle	Continuous
Working Pressure Range	-26.7 kPa to 45 kPa (-200 mmHg to 0.45 kgf/cm²) -267 mbar to 0.45 bar -7.87 in.Hg to 6.4 psig
Rated Performance	5,000 hours
Inlet	6 mm O.D. straight barb
Outlet	6 mm O.D. straight barb
Coil Insulation Class	E or its equivalent (JETL)
Mounting Dimensions	50 (L) x 30 (W) mm 1-31/32" (L) x 1-3/16" (W)
Weight	0.25 kg 0.55 Lbs.
Leadwire Length	400 mm 15-3/4"

Please read the page of "How to Use This Catalog" first for correct use of compressors and pumps.

Application Examples

Endoscopes

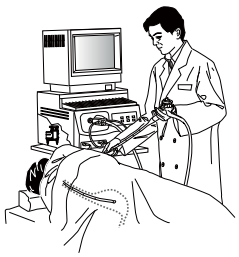

Removal of micromachining chips

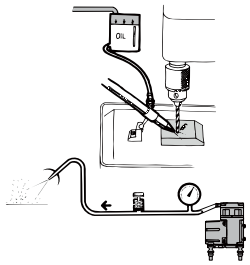

Dimensional Outline Drawing (Unit: mm)

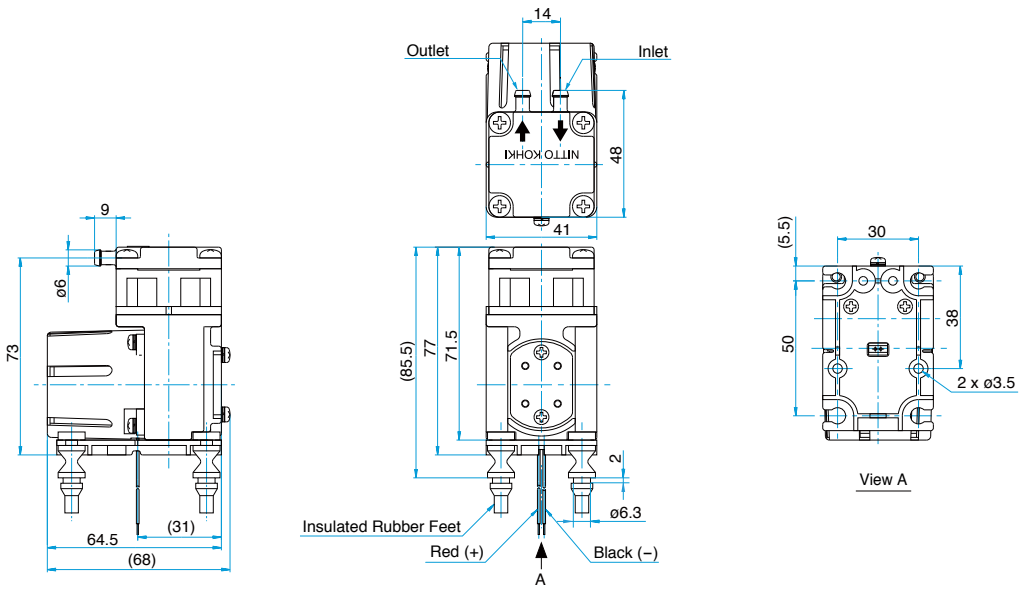

Compressor and Vacuum Pump

Model DP0102H-X1

Brushless DC Motor **12 V DC**

Airflow & Power Consumption

Airflow Characteristics

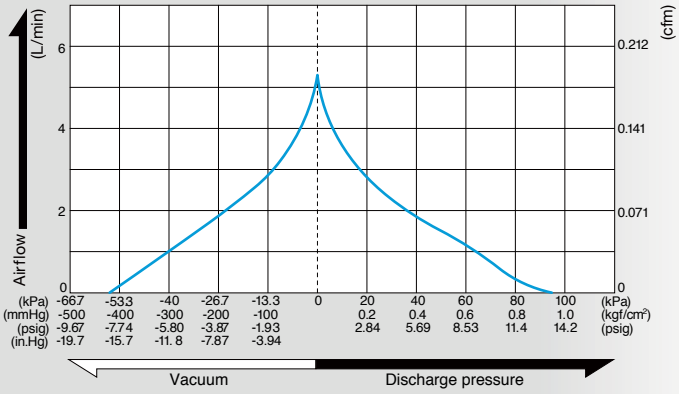

Current Characteristics

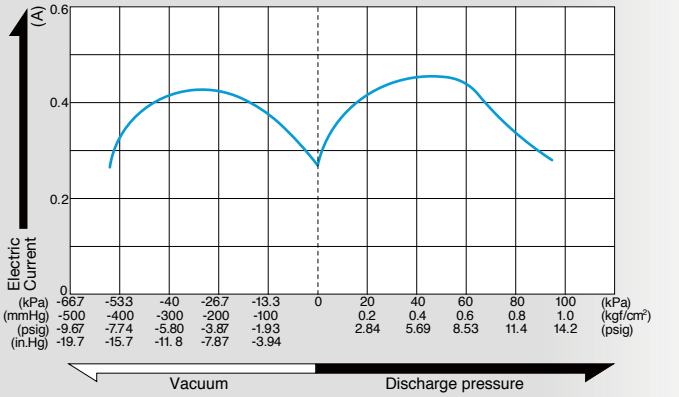

Specifications

Attainable Vacuum	-50.7 kPa (-380 mmHg) -507 mbar -15 in.Hg
Free Air Displacement	4.0 L/min 0.141 cfm
Rated Voltage	12 V DC
Maximum Pressure	80 kPa (0.8 kgf/cm²) 0.8 bar 11.4 psig
Maximum Current	0.7 A
Duty Cycle	Continuous
Working Pressure Range	-50.7 kPa to 80 kPa (-380 mmHg to 0.8 kgf/cm²) -507 mbar to 0.8 bar -15 in.Hg to 11.4 psig
Rated Performance	3,000 hours
Inlet	6 mm O.D. straight barb
Outlet	6 mm O.D. straight barb
Coil Insulation Class	E or its equivalent (JETL)
Mounting Dimensions	50 (L) x 30 (W) mm 1-31/32" (L) x 1-3/16" (W)
Weight	0.25 kg 0.55 Lbs.
Leadwire Length	400 mm 15-3/4"

Please read the page of "How to Use This Catalog" first for correct use of compressors and pumps.

Application Examples

Vacuum pick up and place devices for CD & DVD

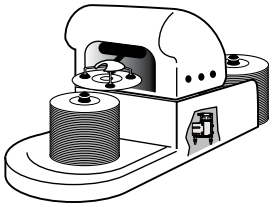

Removal of micromachining chips

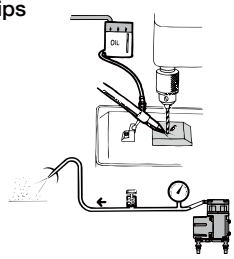

Dimensional Outline Drawing (Unit: mm)

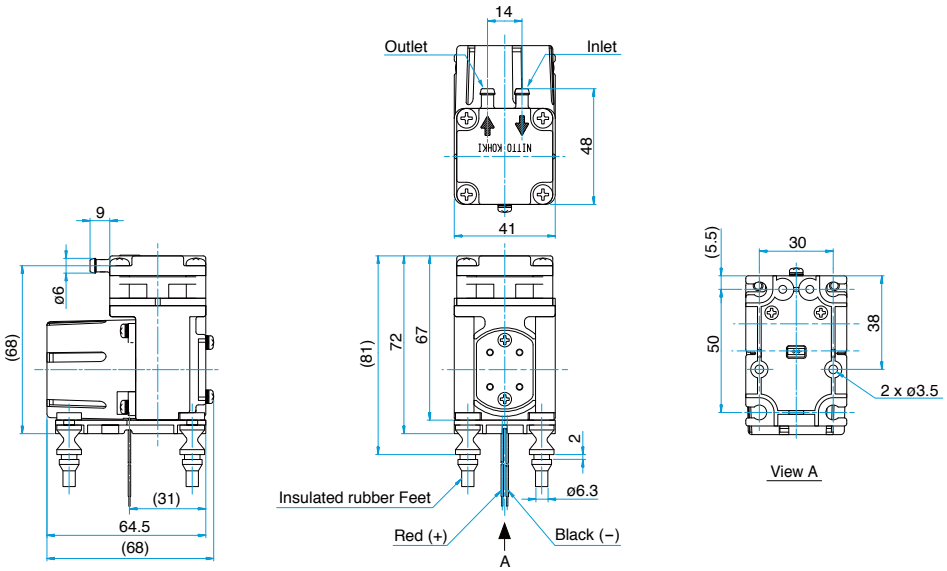

Compressor

Model DP0102H-X2

Brushless DC Motor **12 V DC**

Airflow & Power Consumption

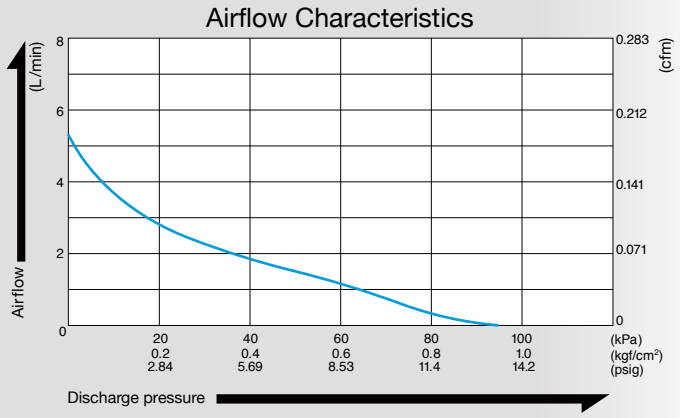

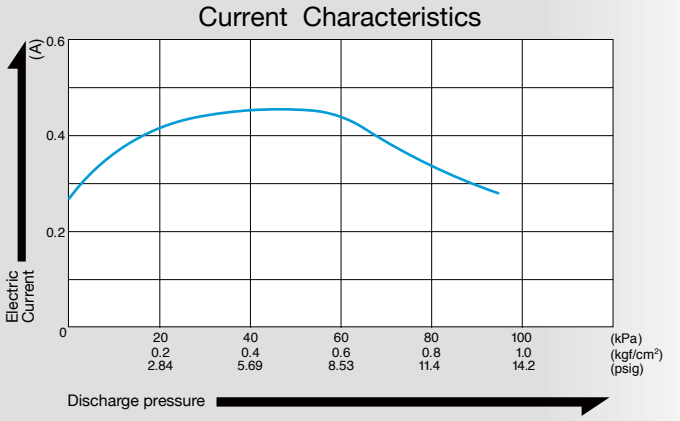

Specifications

Free Air Displacement	4.0 L/min 0.141 cfm
Rated Voltage	12 V DC
Maximum Pressure	80 kPa (0.8 kgf/cm²) 0.8 bar 11.4 psig
Maximum Current	0.7 A
Duty Cycle	Continuous
Working Pressure Range	0 to 80 kPa (0 to 0.8 kgf/cm²) 0 to 0.8 bar 0 to 11.4 psig
Rated Performance (MTTF)	3,000 hours
Inlet	6 mm O.D. straight barb
Outlet	6 mm O.D. straight barb
Coil Insulation Class	E or its equivalent (JETL)
Mounting Dimensions	50 (L) x 30 (W) mm 1-31/32" (L) x 1-3/16" (W)
Weight	0.25 kg 0.55 Lbs.
Leadwire Length	400 mm 15-3/4"

Please read the page of "How to Use This Catalog" first for correct use of compressors and pumps.

Application Examples

Removal of micromachining chips

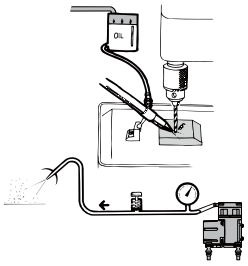

Dimensional Outline Drawing (Unit: mm)

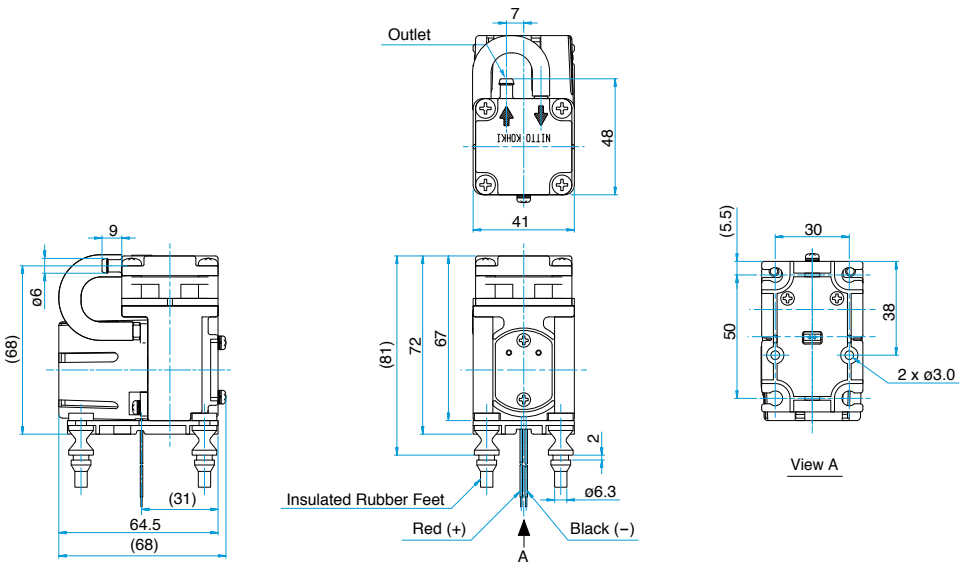

Compressor and Vacuum Pump

Model DP0105-X1

Brush DC Motor **12 V DC**

Airflow & Power Consumption

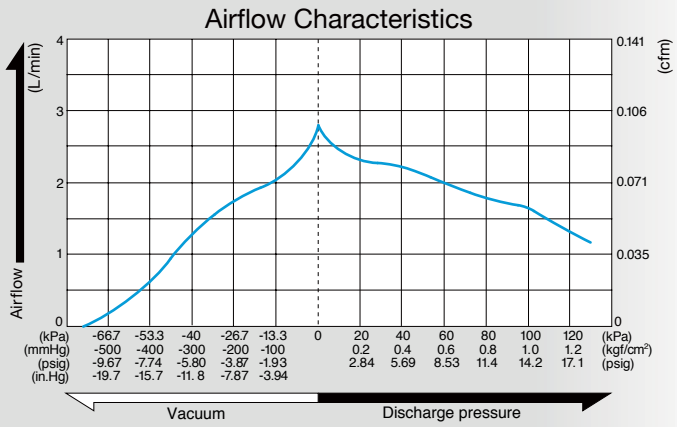

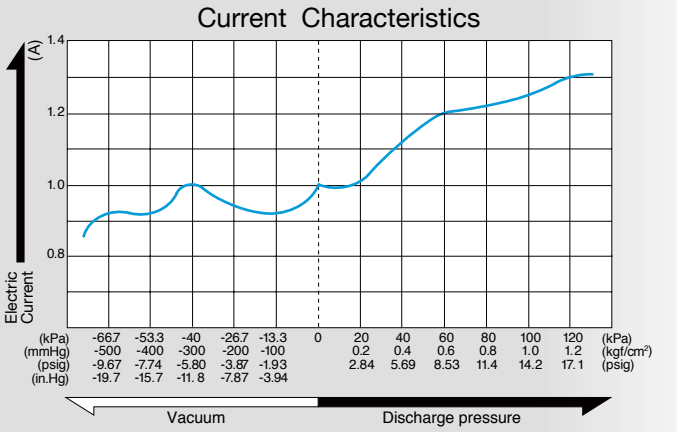

Specifications

Attainable Vacuum	-66.7 kPa (-500 mmHg) -667 mbar -19.7 in.Hg
Free Air Displacement	2.8 L/min 0.099 cfm
Rated Voltage	12 V DC
Maximum Pressure	250 kPa (2.5 kgf/cm²) 2.5 bar 35.6 psig
Maximum Current	1.9 A
Duty Cycle	30 minutes
Working Pressure Range	-66.7 to 100 kPa (-500 mmHg to 1 kgf/cm²) -667 mbar to 1 bar -19.7 in.Hg to 14.2 psig
Rated Performance	1,000 hours
Inlet	5 mm O.D. straight barb
Outlet	5 mm O.D. straight barb
Coil Insulation Class	E or its equivalent (JETL)
Mounting Dimensions	42 (L) x 24.5 (W) mm 1-21/32" (L) x 1-31/32" (W)
Weight	0.36 kg 0.79 Lbs.
Leadwire Length	360 mm 14-11/64"

Please read the page of "How to Use This Catalog" first for correct use of compressors and pumps.

Application Examples

Vending Machines

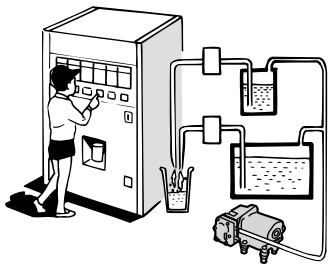

Dimensional Outline Drawing (Unit: mm)

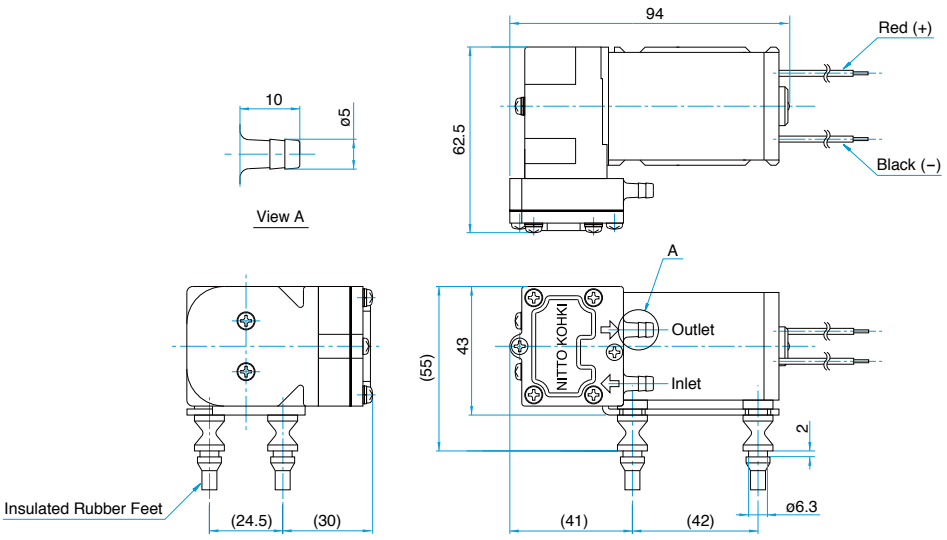

Compressor and Vacuum Pump

Model DP0105-Y1

Brush DC Motor **24 V DC**

Airflow & Power Consumption

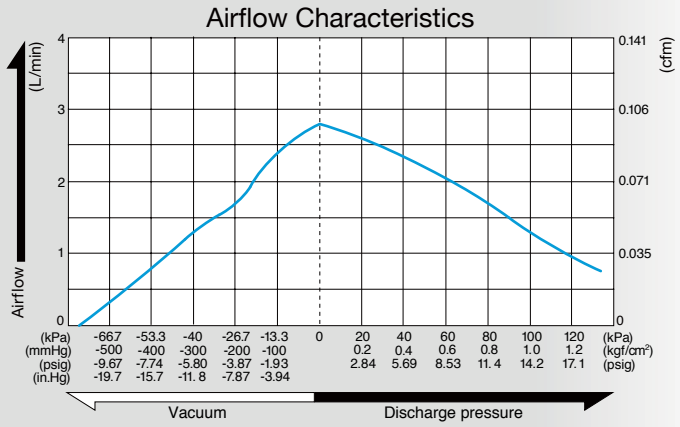

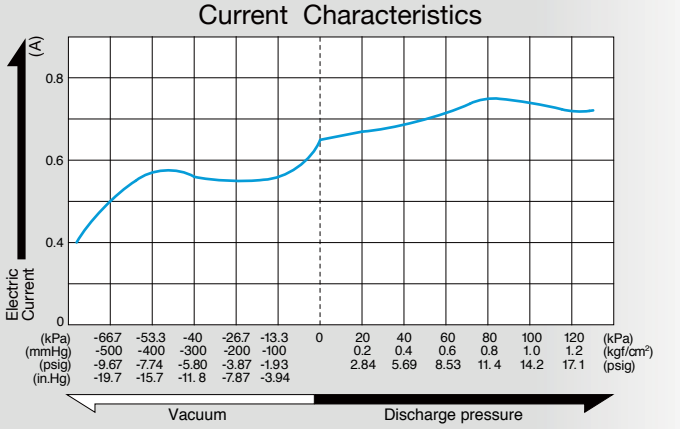

Specifications

Attainable Vacuum	-66.7 kPa (-500 mmHg) -667 mbar -19.7 in.Hg
Free Air Displacement	2.8 L/min 0.099 cfm
Rated Voltage	24 V DC
Maximum Pressure	250 kPa (2.5 kgf/cm²) 2.5 bar 35.6 psig
Maximum Current	0.95 A
Duty Cycle	30 minutes
Working Pressure Range	-66.7 to 100 kPa (-500 mmHg to 1 kgf/cm²) -667 mbar to 1 bar -19.7 in.Hg to 14.2 psig
Rated Performance	1,000 hours
Inlet	5 mm O.D. straight barb
Outlet	5 mm O.D. straight barb
Coil Insulation Class	E or its equivalent (JETL)
Mounting Dimensions	42 (L) x 24.5 (W) mm 1-21/32" (L) x 1-31/32" (W)
Weight	0.36 kg 0.79 Lbs.
Leadwire Length	360 mm 14-11/64"

Please read the page of "How to Use This Catalog" first for correct use of compressors and pumps.

Application Examples

Vending Machines

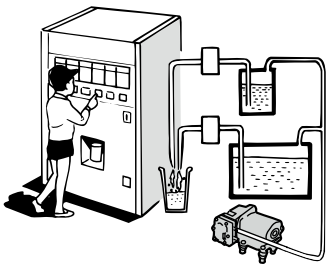

Dimensional Outline Drawing (Unit: mm)

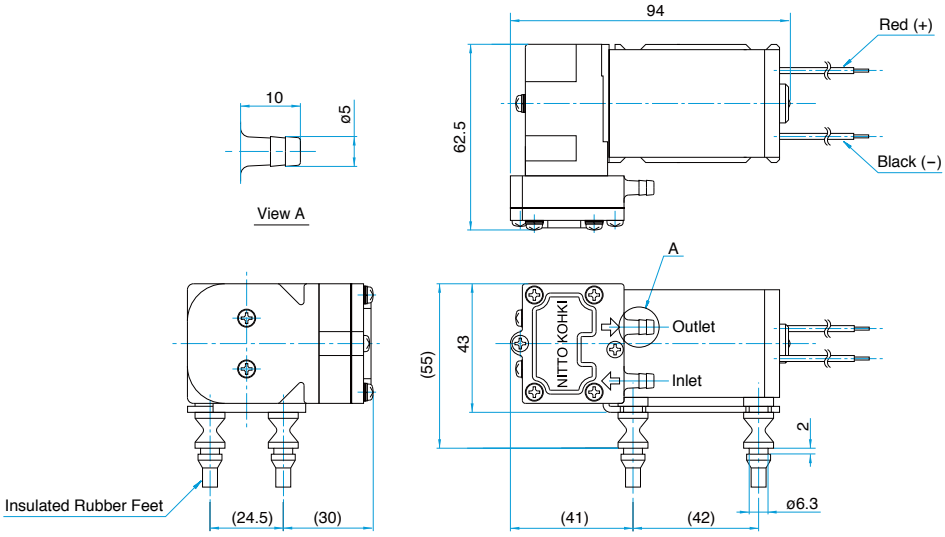

Compressor

Model DPA0105-X1

Brushless DC Motor **12 V DC**

Airflow & Power Consumption

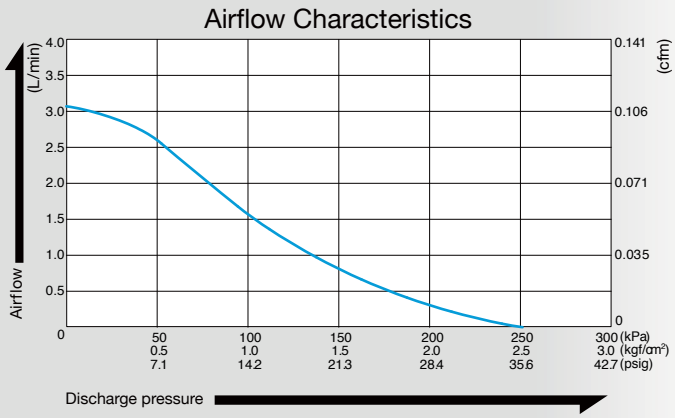

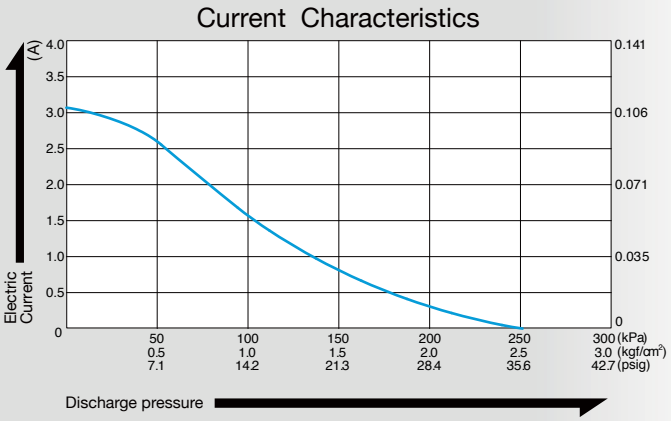

Specifications

Free Air Displacement	2.8 L/min 0.099 cfm
Rated Voltage	12 V DC
Maximum Pressure	220 kPa (2.2 kgf/cm²) 2.2 bar 31.3 psig
Maximum Current	1.4 A
Duty Cycle	Continuous
Working Pressure Range	0 to 100 kPa (0 to 1 kgf/cm²) 0 to 1 bar 0 to 14.2 psig
Rated Performance (MTTF)	5,000 hours
Inlet	5 mm O.D. straight barb
Outlet	5 mm O.D. straight barb
Coil Insulation Class	A or its equivalent (JETL)
Mounting Dimensions	32 (L) x 27.5 (W) mm 1-9/32" (L) x 1-5/64" (W)
Weight	0.3 kg 0.66 Lbs.
Leadwire Length	360 mm 14-11/64"

Please read the page of "How to Use This Catalog" first for correct use of compressors and pumps.

Application Examples

Vending Machines

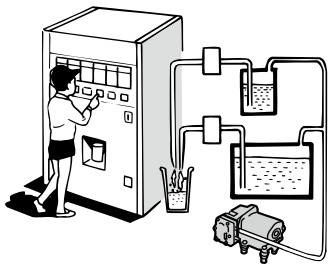

Dimensional Outline Drawing (Unit: mm)

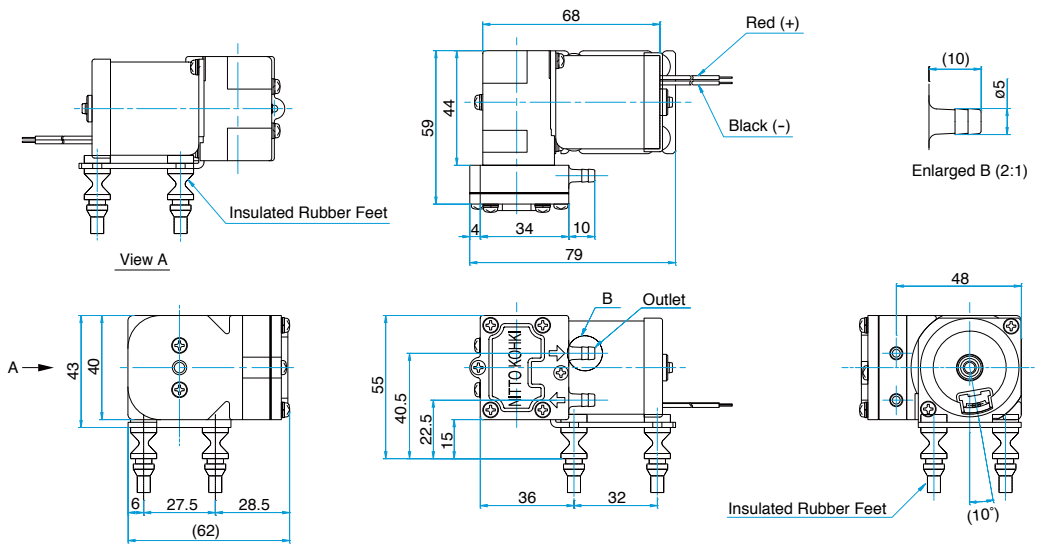

Compressor

Model DPA0105-Y1

Brushless DC Motor **24 V DC**

Airflow & Power Consumption

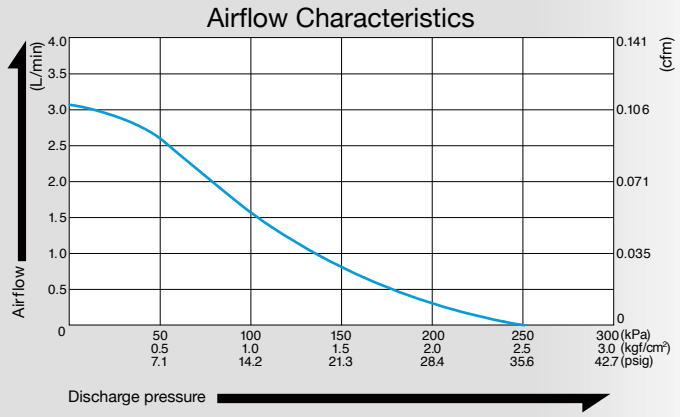

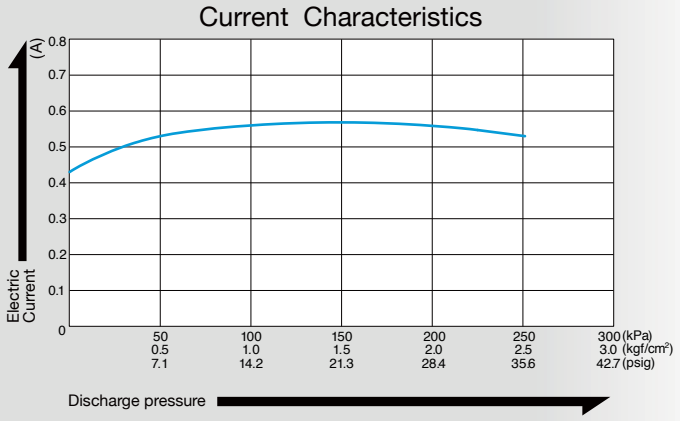

Specifications

Free Air Displacement	2.8 L/min 0.099 cfm
Rated Voltage	24 V DC
Maximum Pressure	220 kPa (2.2 kgf/cm²) 2.2 bar 31.3 psig
Maximum Current	0.7 A
Duty Cycle	Continuous
Working Pressure Range	0 to 100 kPa (0 to 1 kgf/cm²) 0 to 1 bar 0 to 14.2 psig
Rated Performance (MTTF)	5,000 hours
Inlet	5 mm O.D. straight barb
Outlet	5 mm O.D. straight barb
Coil Insulation Class	A or its equivalent (JETL)
Mounting Dimensions	32 (L) x 27.5 (W) mm 1-9/32" (L) x 1-5/64" (W)
Weight	0.3 kg 0.66 Lbs.
Leadwire Length	360 mm 14-11/64"

Please read the page of "How to Use This Catalog" first for correct use of compressors and pumps.

Application Examples

Vending Machines

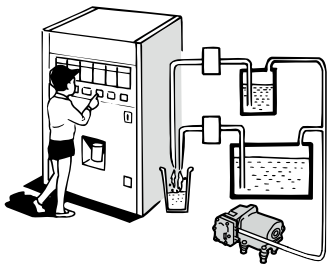

Dimensional Outline Drawing (Unit: mm)

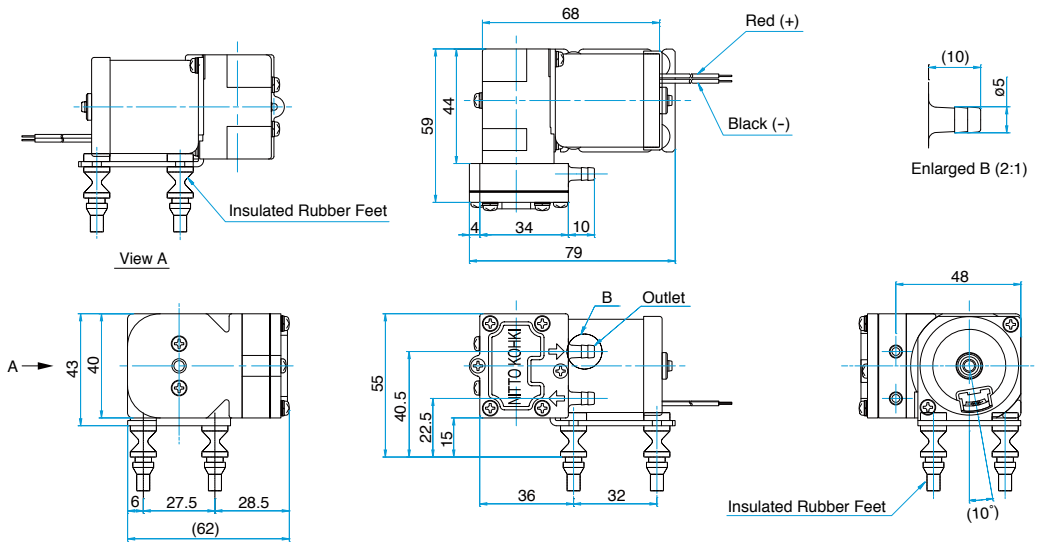

Compressor and Vacuum Pump

Model DP0110-X1

Brushless DC Motor **12 V DC**

Airflow & Power Consumption

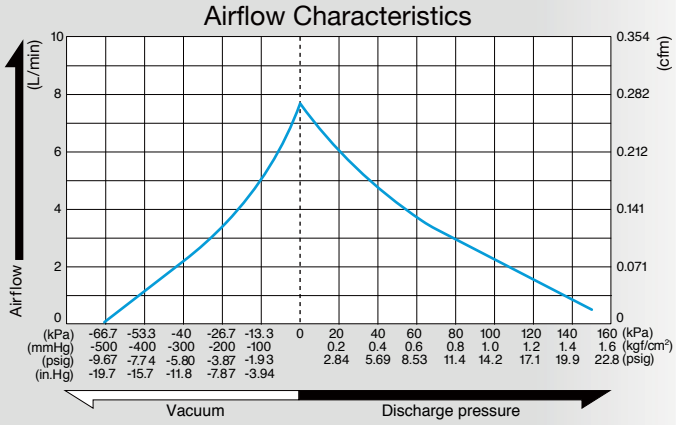

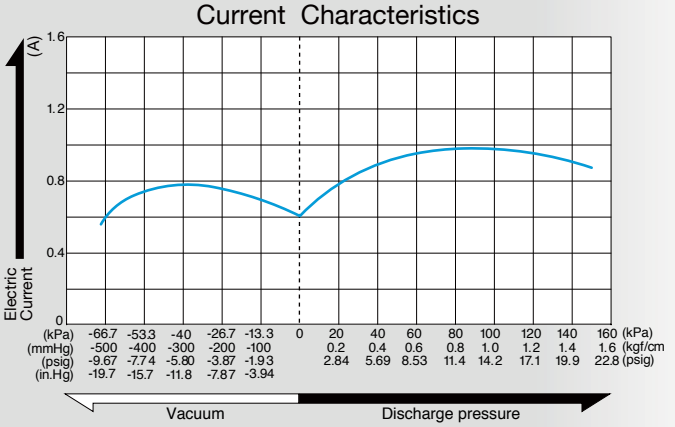

Specifications

Attainable Vacuum	-66.7 kPa (-500 mmHg) -667 mbar -19.7 in.Hg
Free Air Displacement	7.5 L/min 0.265 cfm
Rated Voltage	12 V DC
Maximum Pressure	150 kPa (1.5 kgf/cm²) 1.5 bar 21.3 psig
Maximum Current	1.2 A or less
Duty Cycle	Continuous
Rated Performance (MTTF)	5,000 hours
Inlet	6 mm O.D. straight barb
Outlet	6 mm O.D. straight barb
Coil Insulation Class	A or its equivalent (JETL)
Mounting Dimensions	50 (L) x 30 (W) mm 1-31/32" (L) x 1-3/16" (W)
Weight	0.30 kg 0.66 Lbs.
Leadwire Length	360 mm 14-11/64"

Please read the page of "How to Use This Catalog" first for correct use of compressors and pumps.

Application Examples

Vacuum pick up and place devices for CD & DVD

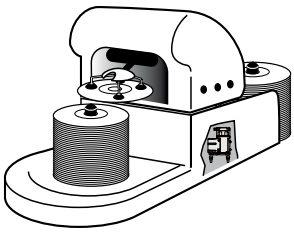

Dimensional Outline Drawing (Unit: mm)

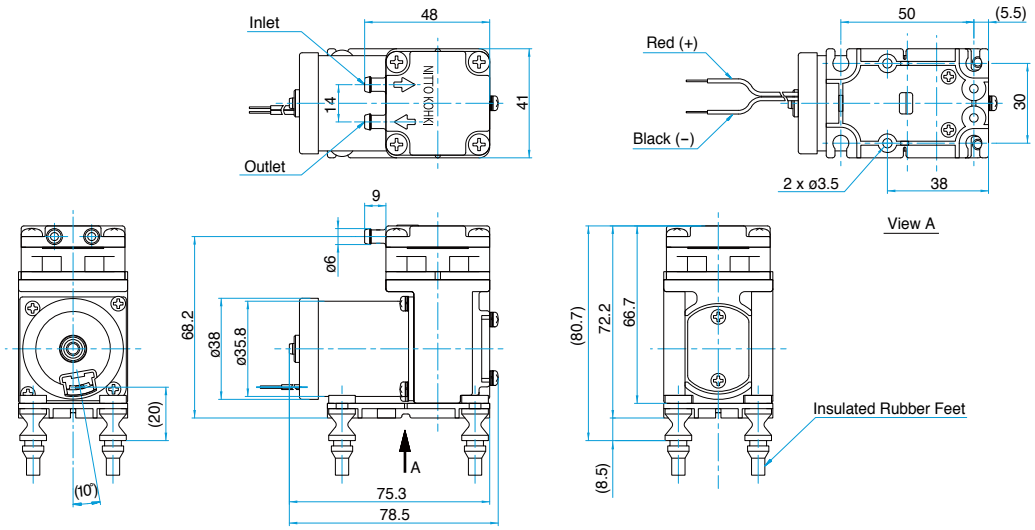

Compressor and Vacuum Pump

Model DP0110-Y1

Brushless DC Motor **24 V DC**

Airflow & Power Consumption

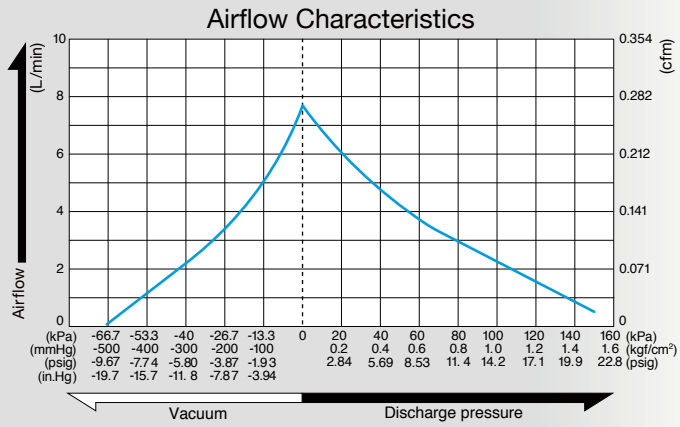

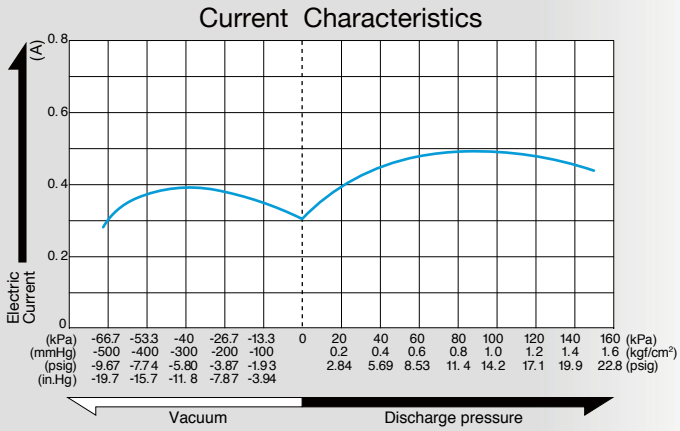

Specifications

Attainable Vacuum	-66.7 kPa (-500 mmHg) -667 mbar -19.7 in.Hg
Free Air Displacement	7.5 L/min 0.265 cfm
Rated Voltage	24 V DC
Maximum Pressure	150 kPa (1.5 kgf/cm²) 1.5 bar 21.3 psig
Maximum Current	0.6 A or less
Duty Cycle	Continuous
Rated Performance (MTTF)	5,000 hours
Inlet	6 mm O.D. straight barb
Outlet	6 mm O.D. straight barb
Coil Insulation Class	A or its equivalent (JETL)
Mounting Dimensions	50 (L) x 30 (W) mm 1-31/32" (L) x 1-3/16" (W)
Weight	0.30 kg 0.66 Lbs.
Leadwire Length	360 mm 14-11/64"

Please read the page of "How to Use This Catalog" first for correct use of compressors and pumps.

Application Examples

Vacuum pick up and place devices for CD & DVD

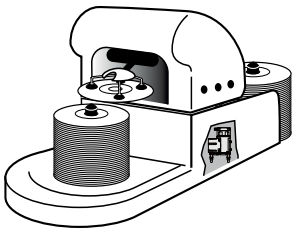

Dimensional Outline Drawing (Unit: mm)

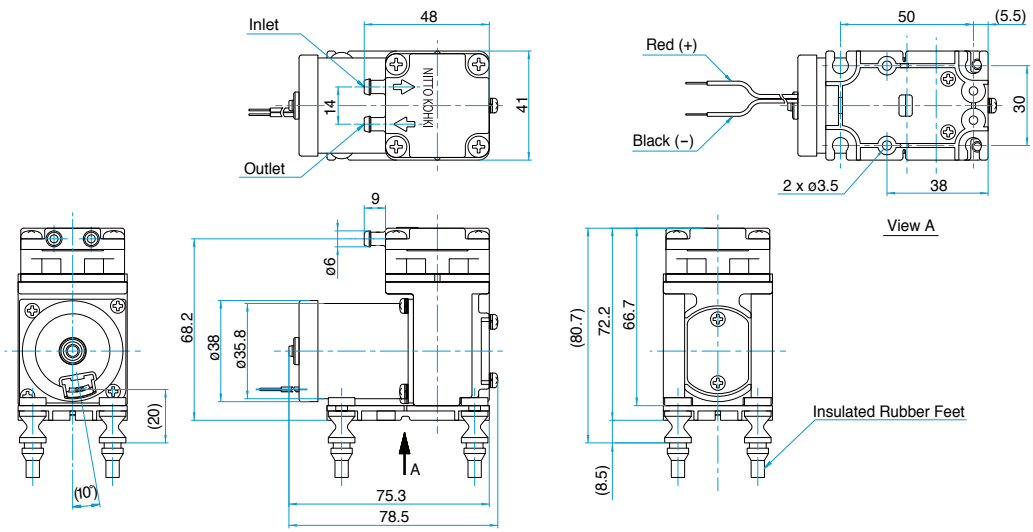

Compressor and Vacuum Pump

Model DP0110-X3

PWM control possible

Brushless DC Motor 12 V DC

Airflow & Power Consumption

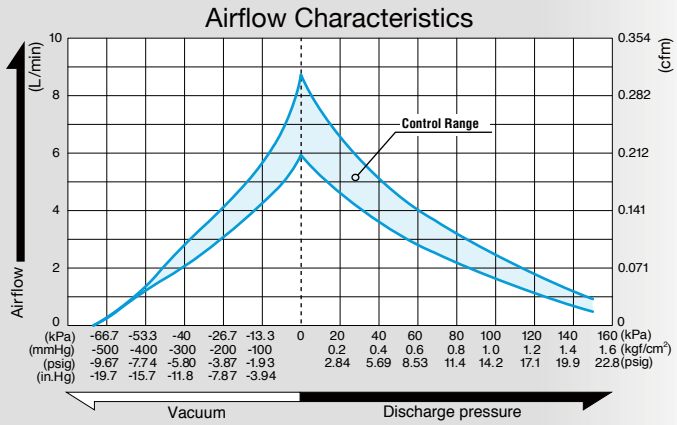

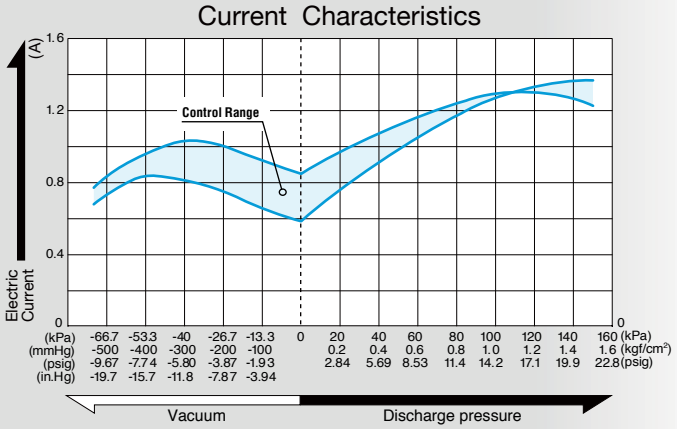

Specifications

Attainable Vacuum	-66.7 kPa (-500 mmHg) -667 mbar -19.7 in.Hg
Free Air Displacement	7.5 L/min 0.265 cfm
Rated Voltage	12 V DC
Maximum Pressure	150 kPa (1.5 kgf/cm²) 1.5 bar 21.3 psig
Maximum Current	1.4 A or less
Duty Cycle	Continuous
Rated Performance (MTTF)	5,000 hours
Control(PWM)	2.5 - 5 V, 15-25 kHz, Duty cycle 80 - 100%
Inlet	6 mm O.D. straight barb
Outlet	6 mm O.D. straight barb
Coil Insulation Class	A or its equivalent (JETL)
Mounting Dimensions	50 (L) x 30 (W) mm 1-31/32" (L) x 1-3/16" (W)
Weight	0.30 kg 0.66 Lbs.
Leadwire Length	180 mm 7-3/32"

Please read the page of "How to Use This Catalog" first for correct use of compressors and pumps.

Application Examples

Vacuum pick up and place devices for CD & DVD

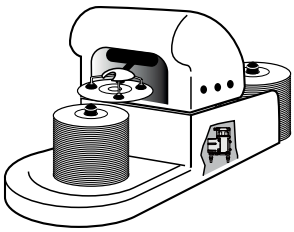

Dimensional Outline Drawing (Unit: mm)

Mounting Dimension of Rubber Foot:
Plate thickness : t=2mm,
Hole diameter : ø6±0.1mm
(Rubber feet come with the product as accessories.)

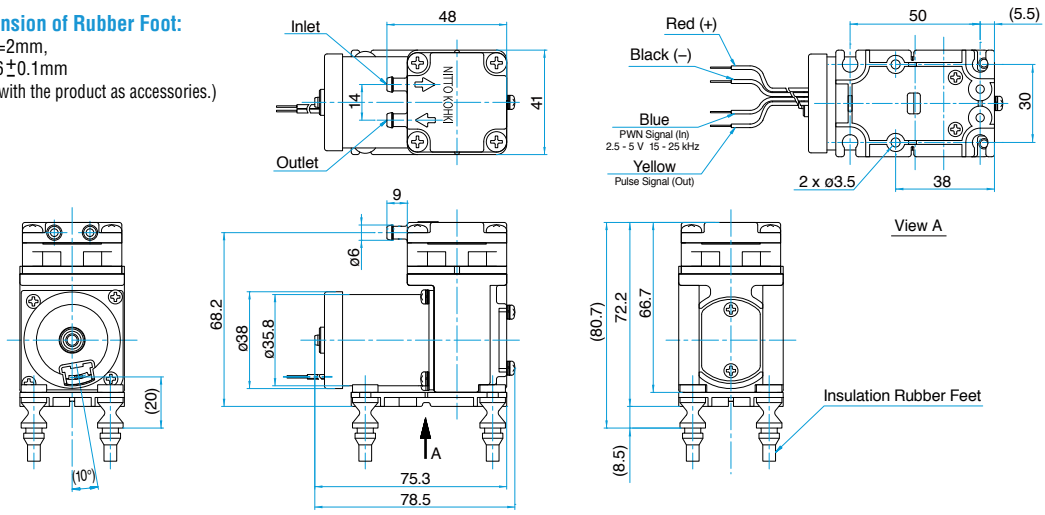

Compressor and Vacuum Pump

Model DP0110T-X1

Brushless DC Motor **12 V DC**

Airflow & Power Consumption

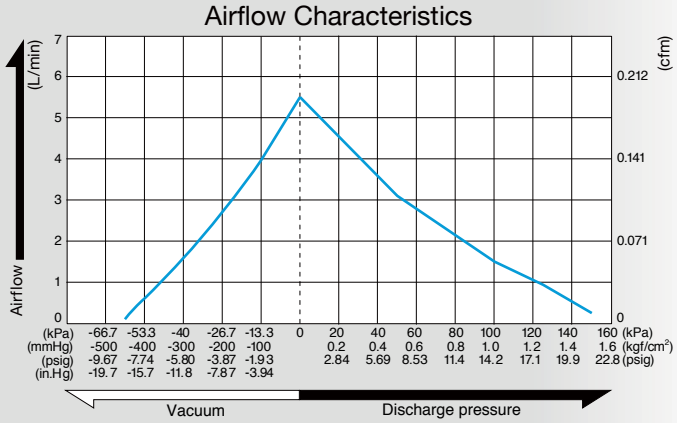

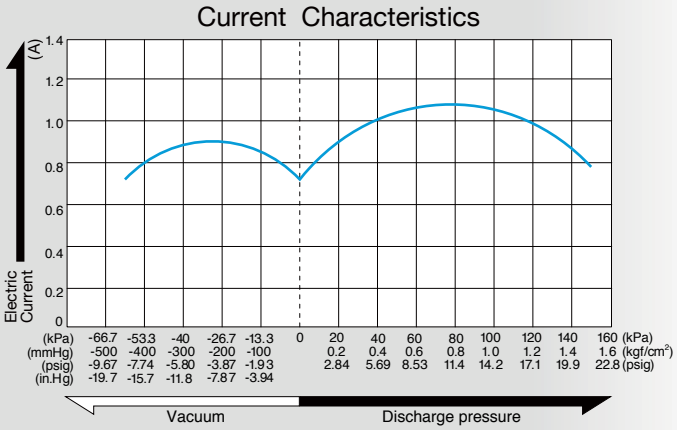

Specifications

Attainable Vacuum	-60.0 kPa (-450 mmHg) -600 mbar -17.7 in.Hg
Free Air Displacement	5.5 L/min 0.194 cfm
Rated Voltage	12 V DC
Maximum Pressure	150 kPa (1.5 kgf/cm²) 1.5 bar 21.3 psig
Maximum Current	1.2 A or less
Duty Cycle	Continuous
Rated Performance (MTTF)	5,000 hours
Inlet	6.8 mm O.D. straight barb
Outlet	6.8 mm O.D. straight barb
Coil Insulation Class	A or its equivalent (JETL)
Mounting Dimensions	36.5 (L) x 37.5 (W) mm 1-7/16" (L) x 1-15/32" (W)
Weight	0.27 kg 0.60 Lbs.
Leadwire Length	360 mm 14-11/64"

Please read the page of "How to Use This Catalog" first for correct use of compressors and pumps.

Application Examples

Vending Machines

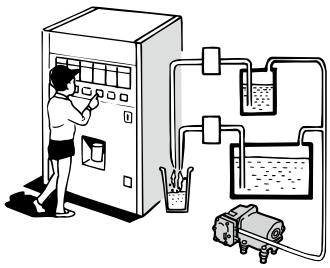

Dimensional Outline Drawing (Unit: mm)

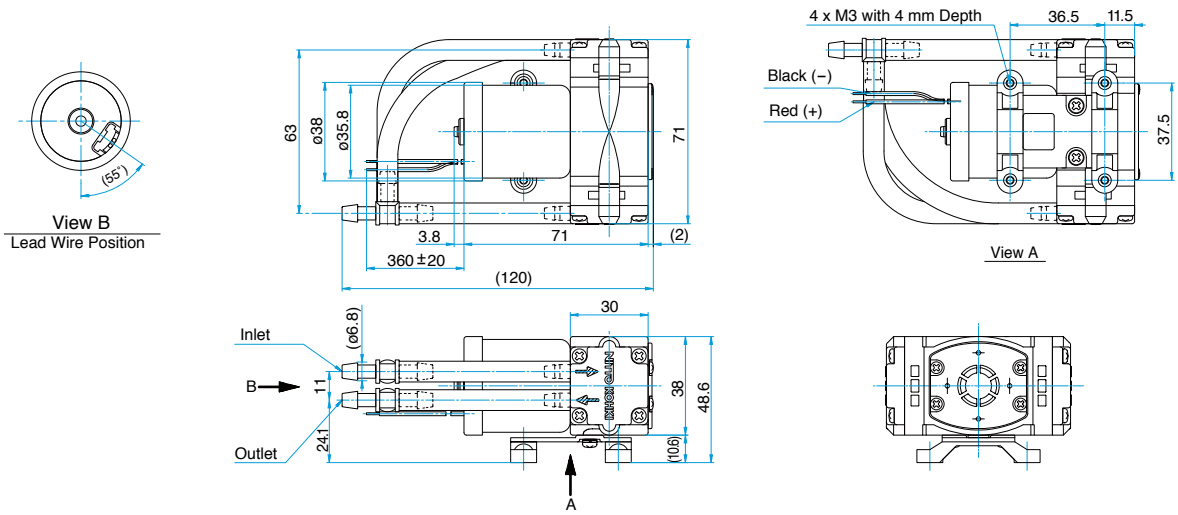

Compressor and Vacuum Pump

Model DP0110T-Y1

Brushless DC Motor **24 V DC**

Airflow & Power Consumption

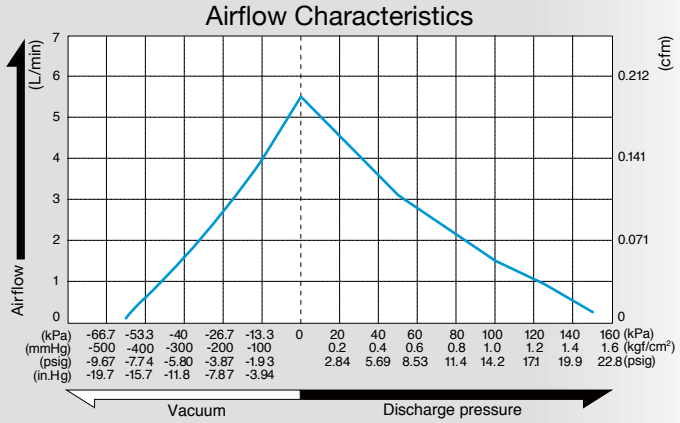

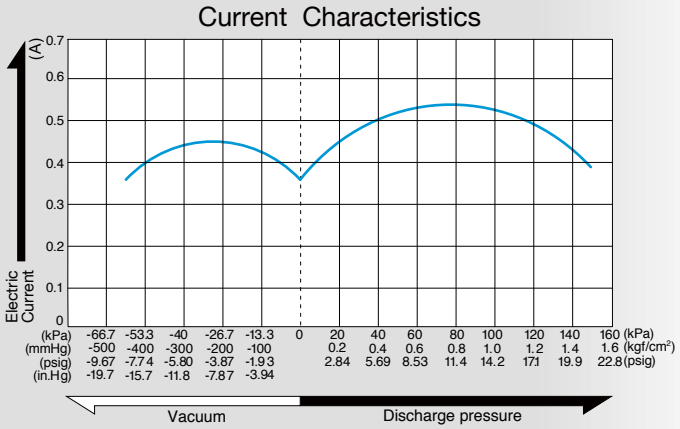

Specifications

Attainable Vacuum	-60.0 kPa (-450 mmHg) -600 mbar -17.7 in.Hg
Free Air Displacement	5.5 L/min 0.194 cfm
Rated Voltage	24 V DC
Maximum Pressure	150 kPa (1.5 kgf/cm²) 1.5 bar 21.3 psig
Maximum Current	0.6 A or less
Duty Cycle	Continuous
Rated Performance (MTTF)	5,000 hours
Inlet	6.8 mm O.D. straight barb
Outlet	6.8 mm O.D. straight barb
Coil Insulation Class	A or its equivalent (JETL)
Mounting Dimensions	36.5 (L) x 37.5 (W) mm 1-7/16" (L) x 1-15/32" (W)
Weight	0.27 kg 0.60 Lbs.
Leadwire Length	360 mm 14-11/64"

Please read the page of "How to Use This Catalog" first for correct use of compressors and pumps.

Application Examples

Vending Machines

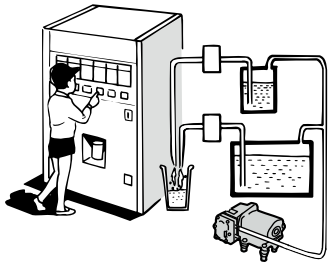

Dimensional Outline Drawing (Unit: mm)

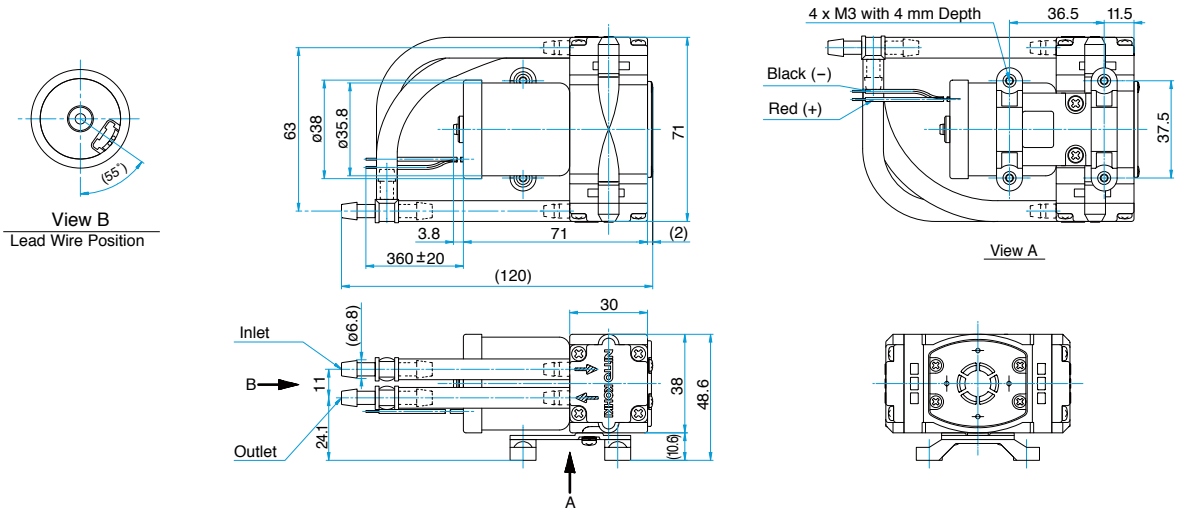

Compressor and Vacuum Pump

Model DP0210T-X1

Brushless DC Motor **12 V DC**

Airflow & Power Consumption

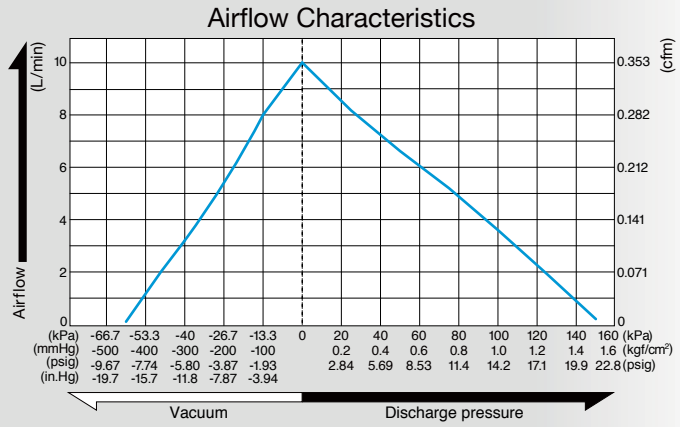

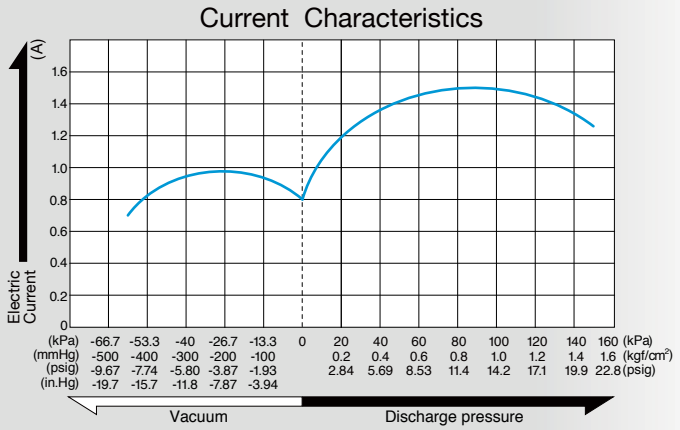

Specifications

Attainable Vacuum	-60.0 kPa (-450 mmHg) -600 mbar -17.7 in.Hg
Free Air Displacement	10 L/min 0.35 cfm
Rated Voltage	12 V DC
Maximum Pressure	150 kPa (1.5 kgf/cm²) 1.5 bar 21.3 psig
Maximum Current	1.6 A
Duty Cycle	Continuous
Rated Performance (MTTF)	5,000 hours
Inlet	6.8 mm O.D. straight barb
Outlet	6.8 mm O.D. straight barb
Coil Insulation Class	B or its equivalent
Mounting Dimensions	36.5 (L) x 37.5 (W) mm 1-7/16" (L) x 1-15/32" (W)
Weight	0.32 kg 0.71 Lbs.
Leadwire Length	300 mm 11-13/16"

Please read the page of "How to Use This Catalog" first for correct use of compressors and pumps.

Application Examples

Vending Machines

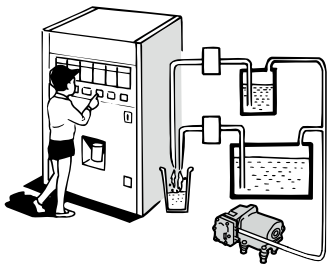

Dimensional Outline Drawing (Unit: mm)

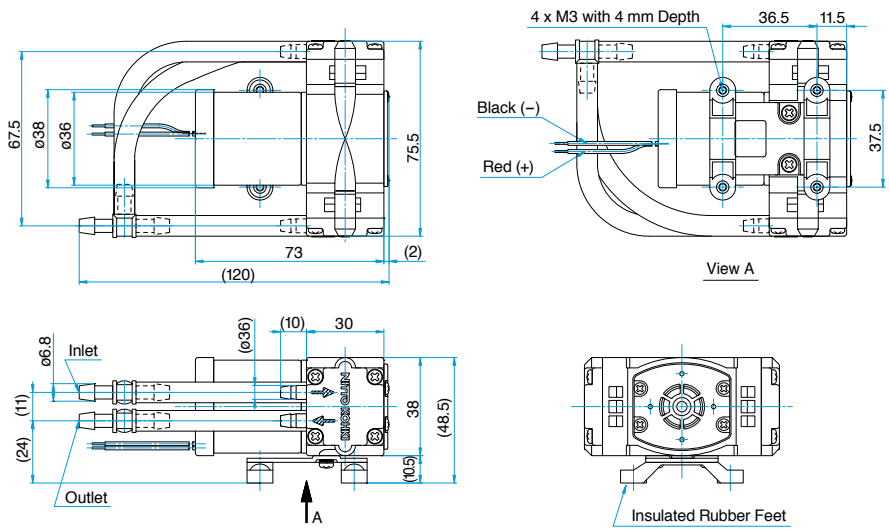

Compressor and Vacuum Pump

Model DP0210T-Y1

Brushless DC Motor **24 V DC**

Airflow & Power Consumption

Airflow Characteristics

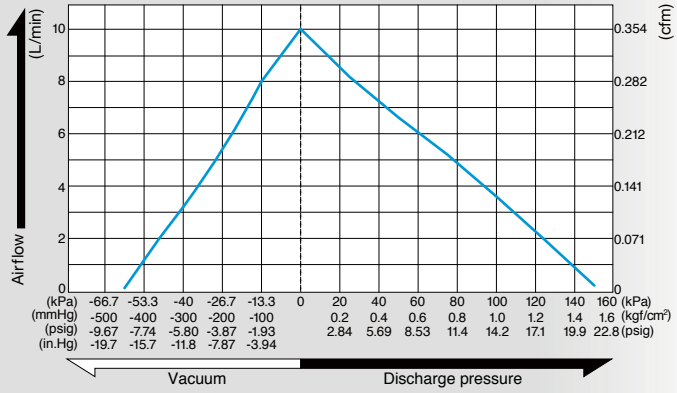

Current Characteristics

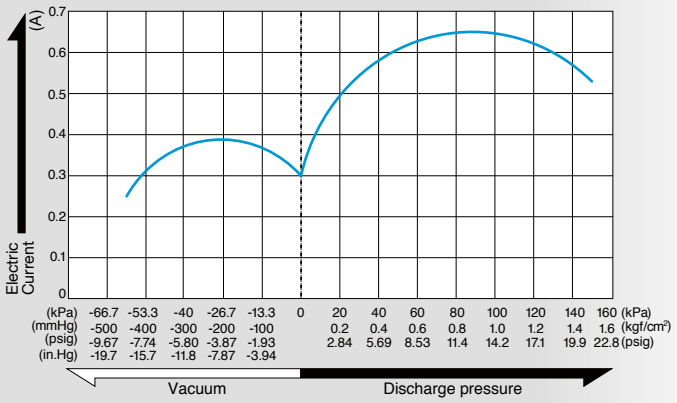

Specifications

Attainable Vacuum	-60.0 kPa (-450 mmHg) -600 mbar -17.7 in.Hg
Free Air Displacement	10 L/min 0.35 cfm
Rated Voltage	24 V DC
Maximum Pressure	150 kPa (1.5 kgf/cm²) 1.5 bar 21.3 psig
Maximum Current	0.8 A
Duty Cycle	Continuous
Rated Performance (MTTF)	5,000 hours
Inlet	6.8 mm O.D. straight barb
Outlet	6.8 mm O.D. straight barb
Coil Insulation Class	B or its equivalent
Mounting Dimensions	36.5 (L) x 37.5 (W) mm 1-7/16" (L) x 1-15/32" (W)
Weight	0.32 kg 0.71 Lbs.
Leadwire Length	300 mm 11-13/16"

Please read the page of "How to Use This Catalog" first for correct use of compressors and pumps.

Application Examples

Vending Machines

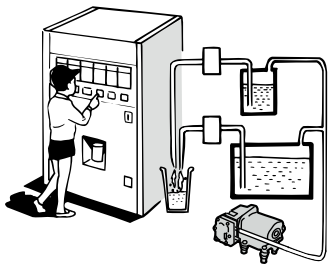

Dimensional Outline Drawing (Unit: mm)

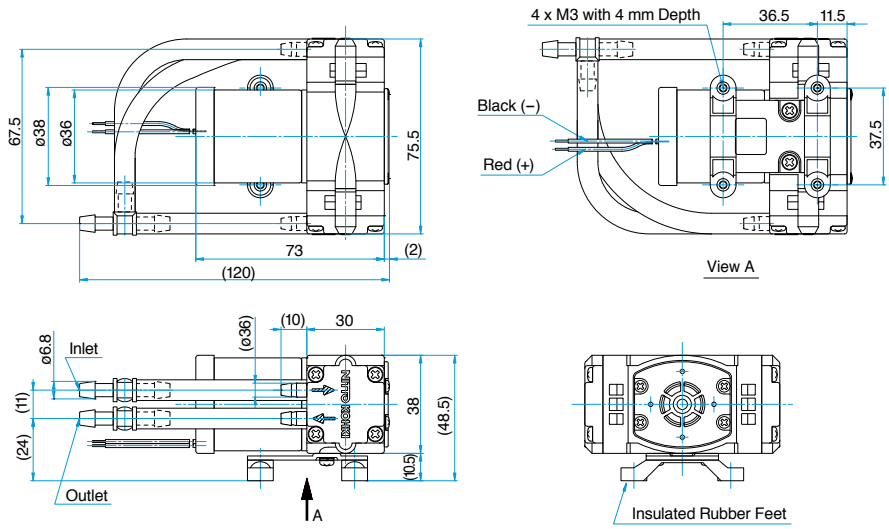

Vacuum Pump

Model DP0410-X1

Brushless DC Motor 12 V DC

Airflow & Power Consumption

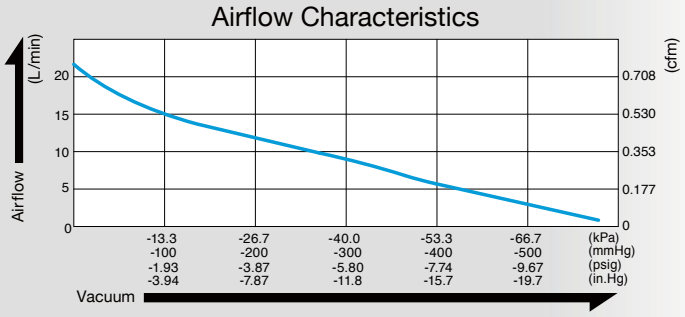

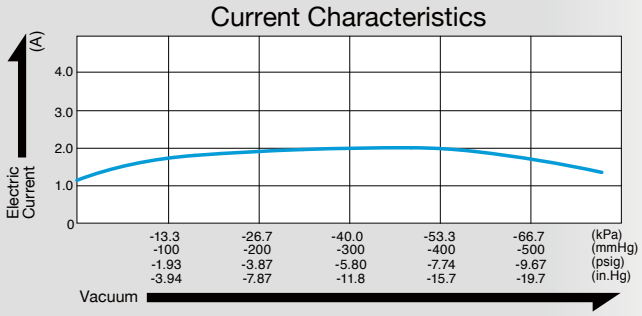

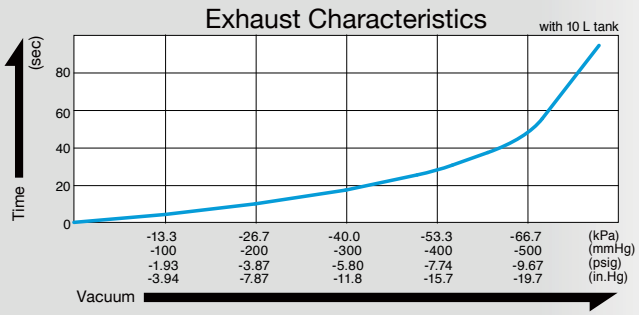

Specifications

Attainable Vacuum	-77.3 kPa (-580 mmHg) -773 mbar -22.8 in.Hg
Free Air Displacement	18 L/min 0.64 cfm
Rated Voltage	12 V DC
Maximum Current	2.5 A or less
Duty Cycle	Continuous
Rated Performance (MTTF)	10,000 hours
Inlet	Rc1/8
Outlet	Rc1/8
Coil Insulation Class	E or its equivalent (JETL)
Mounting Dimensions	70 (L) x 45 (W) mm 2-3/4" (L) x 1-49/64" (W)
Weight	1.1 kg 2.4 Lbs.
Leadwire Length	285 mm 11-7/32"

Please read the page of "How to Use This Catalog" first for correct use of compressors and pumps.

Application Examples

Air Cylinder/Chuck Driver

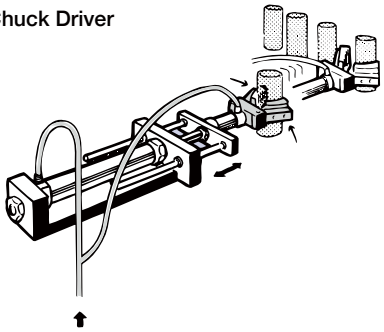

Dimensional Outline Drawing (Unit: mm)

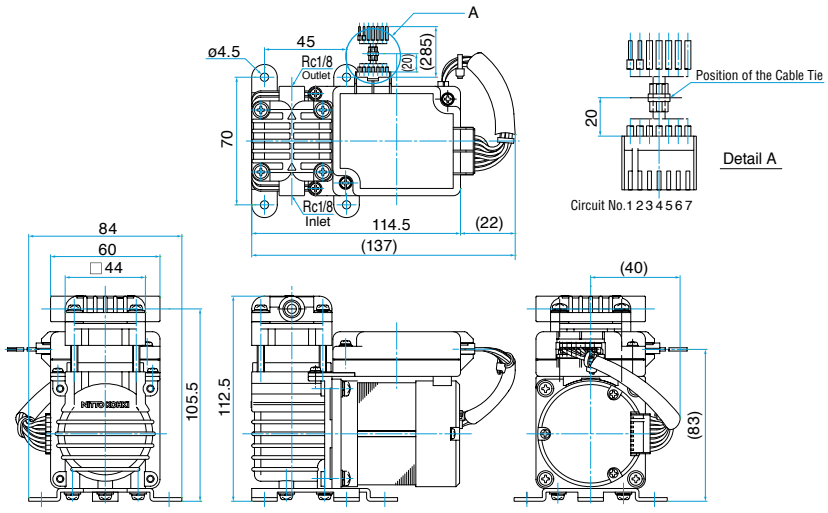

Connection Table

		Power Source		Control Signal				
Circuit No.		1	2	3	4	5	6	7
Cord Color		Red	Black	Brown	Orange	Yellow	Green	Gray
Function		V+	V-	DRIVE /FREE	PULSE	ALARM	SPEED	SGND
Option	Function Off	ON		OFF				
	Function On	ON		ON				
Cord Size		AWG20		AWG22				
Line Type		UL1007						

*Control function is "OFF" by default.

- Be sure to secure the lead wires with a cable tie. (See the detail A.) If they are not secured, poor contact of the connector may occur and result in failure.
- For the details of wiring, please see the user's instructions.

Vacuum Pump

Model DP0410-Y1

Brushless DC Motor 24 V DC

Airflow & Power Consumption

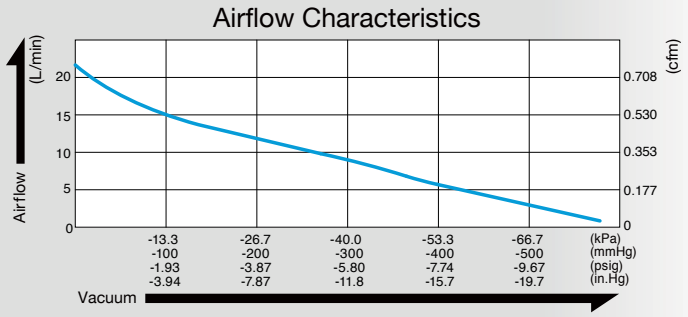

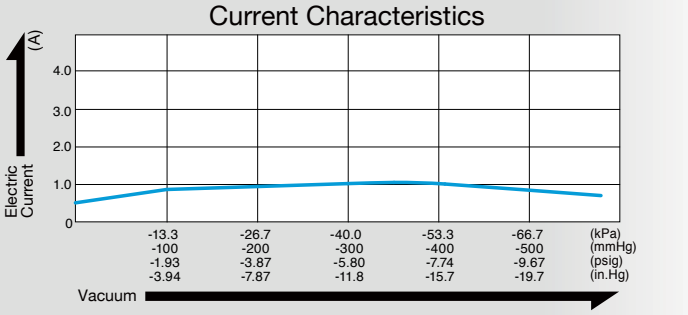

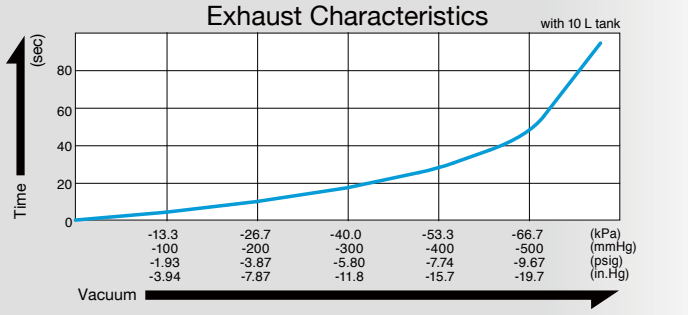

Specifications

Attainable Vacuum	-77.3 kPa (-580 mmHg) -773 mbar -22.8 in.Hg
Free Air Displacement	18 L/min 0.64 cfm
Rated Voltage	24 V DC
Maximum Current	1.5 A or less
Duty Cycle	Continuous
Rated Performance (MTTF)	10,000 hours
Inlet	Rc1/8
Outlet	Rc1/8
Coil Insulation Class	E or its equivalent (JETL)
Mounting Dimensions	70 (L) x 45 (W) mm 2-3/4" (L) x 1-49/64" (W)
Weight	1.1 kg 2.43 Lbs.
Leadwire Length	285 mm 11-7/32"

Please read the page of "How to Use This Catalog" first for correct use of compressors and pumps.

Application Examples

Air Cylinder/Chuck Driver

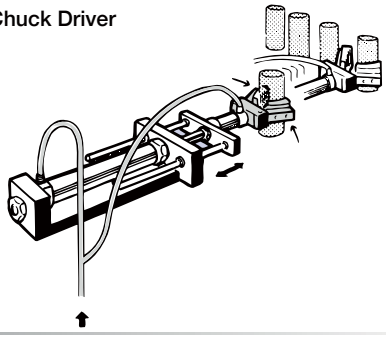

Dimensional Outline Drawing (Unit: mm)

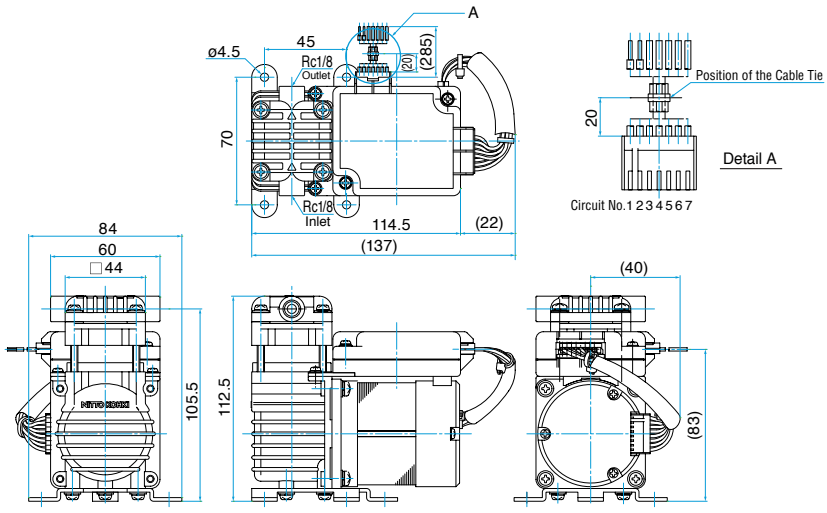

Connection Table

		Power Source		Control Signal				
Circuit No.		1	2	3	4	5	6	7
Cord Color		Red	Black	Brown	Orange	Yellow	Green	Gray
Function		V+	V-	DRIVE /FREE	PULSE	ALARM	SPEED	SGND
Option	Function Off	ON		OFF				
	Function On	ON		ON				
Cord Size		AWG20		AWG22				
Line Type		UL1007						

*Control function is "OFF" by default.

- Be sure to secure the lead wires with a cable tie. (See the detail A.) If they are not secured, poor contact of the connector may occur and result in failure.
- For the details of wiring, please see the user's instructions.

Compressor

Model DP0410-X2

Brushless DC Motor **12 V DC**

Airflow & Power Consumption

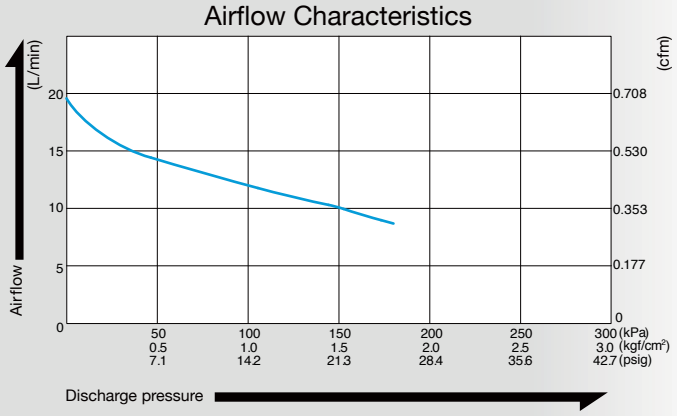

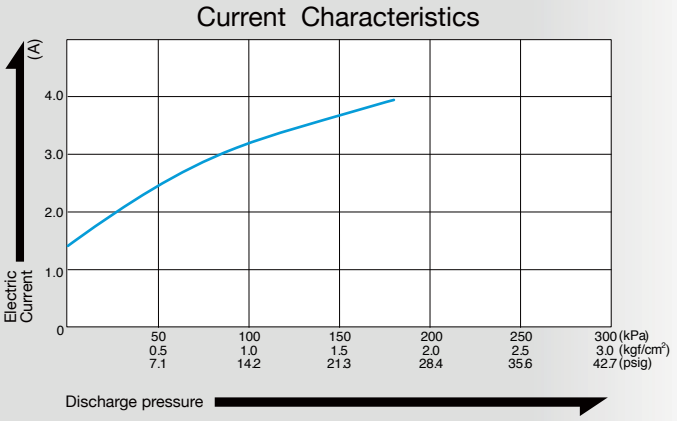

Specifications

Free Air Displacement	18 L/min 0.64 cfm
Rated Voltage	12 V DC
Maximum Pressure	180 kPa (1.8 kgf/cm²) 1.8 bar 25.6 psig
Maximum Current	5.0 A
Duty Cycle	Continuous
Working Pressure Range	0 to 180 kPa (0 to 1.8 kgf/cm²) 0 to 1.8 bar 0 to 25.6 psig
Rated Performance (MTTF)	10,000 hours
Inlet	ISO RC 1/8
Outlet	ISO RC 1/8
Coil Insulation Class	E or its equivalent (JETL)
Mounting Dimensions	70 (L) x 45 (W) mm 2-3/4" (L) x 1-49/64" (W)
Weight	1.1 kg 2.4 Lbs.
Leadwire Length	285 mm 11-7/32"

Please read the page of "How to Use This Catalog" first for correct use of compressors and pumps.

Application Examples

Air Cylinder/Chuck Driver

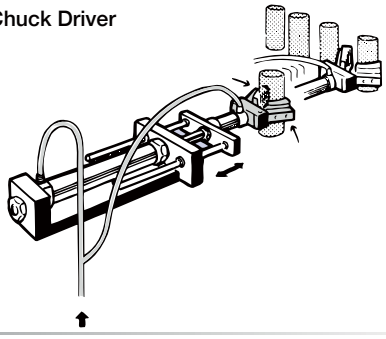

Dimensional Outline Drawing (Unit: mm)

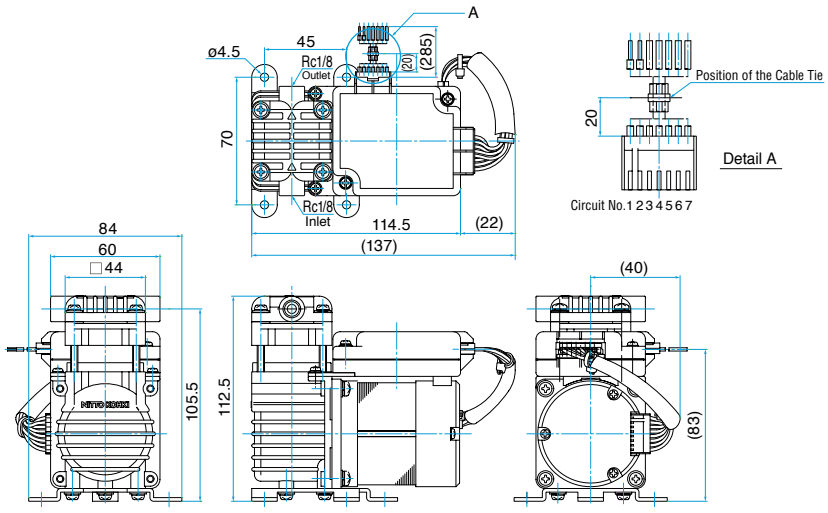

Connection Table

		Power Source		Control Signal				
Circuit No.		1	2	3	4	5	6	7
Cord Color		Red	Black	Brown	Orange	Yellow	Green	Gray
Function		V+	V-	DRIVE /FREE	PULSE	ALARM	SPEED	SGND
Option	Function Off	ON		OFF				
	Function On	ON		ON				
Cord Size		AWG20		AWG22				
Line Type		UL1007						

*Control function is "OFF" by default.

- Be sure to secure the lead wires with a cable tie. (See the detail A.) If they are not secured, poor contact of the connector may occur and result in failure.
- For the details of wiring, please see the user's instructions.

Compressor

Model DP0410-Y2

Brushless DC Motor **24 V DC**

Airflow & Power Consumption

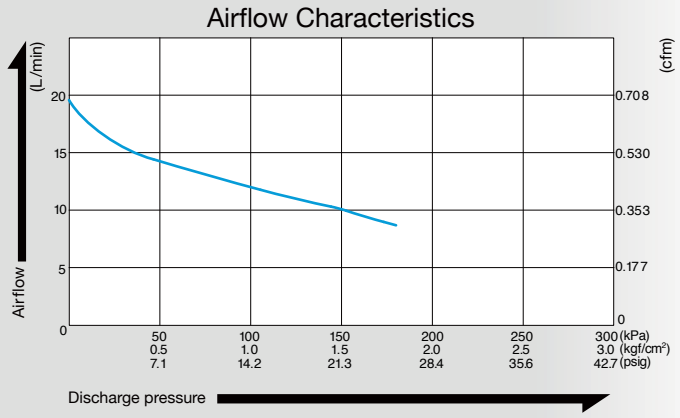

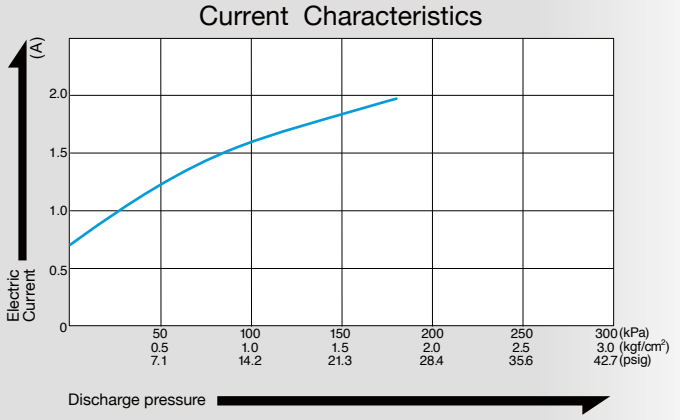

Specifications

Free Air Displacement	18 L/min 0.64 cfm
Rated Voltage	24 V DC
Maximum Pressure	180 kPa (1.8 kgf/cm²) 1.8 bar 25.6 psig
Maximum Current	2.7 A
Duty Cycle	Continuous
Working Pressure Range	0 to 180 kPa (0 to 1.8 kgf/cm²) 0 to 1.8 bar 0 to 25.6 psig
Rated Performance (MTTF)	10,000 hours
Inlet	ISO RC 1/8
Outlet	ISO RC 1/8
Coil Insulation Class	E or its equivalent (JETL)
Mounting Dimensions	70 (L) x 45 (W) mm 2-3/4" (L) x 1-49/64" (W)
Weight	1.1 kg 2.4 Lbs.
Leadwire Length	285 mm 11-7/32"

Please read the page of "How to Use This Catalog" first for correct use of compressors and pumps.

Application Examples

Air Cylinder/Chuck Driver

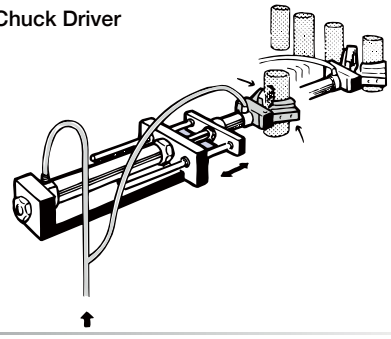

Dimensional Outline Drawing (Unit: mm)

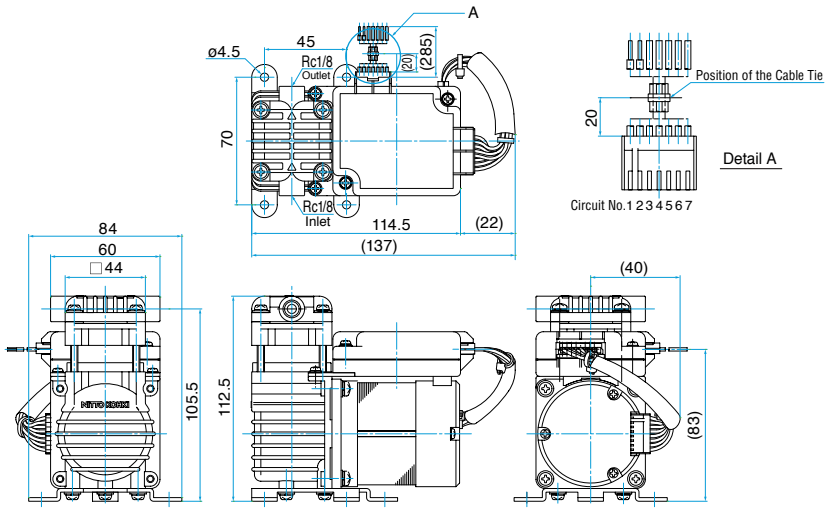

Connection Table

		Power Source		Control Signal				
Circuit No.		1	2	3	4	5	6	7
Cord Color		Red	Black	Brown	Orange	Yellow	Green	Gray
Function		V+	V-	DRIVE /FREE	PULSE	ALARM	SPEED	SGND
Option	Function Off	ON		OFF				
	Function On	ON		ON				
Cord Size		AWG20		AWG22				
Line Type		UL1007						

*Control function is "OFF" by default.

- Be sure to secure the lead wires with a cable tie. (See the detail A.) If they are not secured, poor contact of the connector may occur and result in failure.
- For the details of wiring, please see the user's instructions.

LIQUID PUMP

Piezoelectric Pump

DC Diaphragm Liquid Pump

Piezoelectric Pump

BIMOR PUMP

Suitable for pumping liquids

Applications

- For supply and drainage
- For cooling circulation
- For medical injection
- For liquid sampling

Specifications

Dimensions (Unit: mm)

BPS type

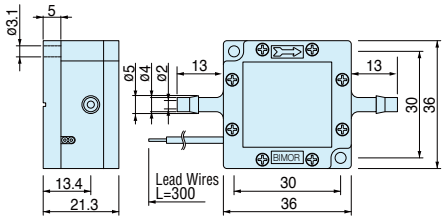

BPH type

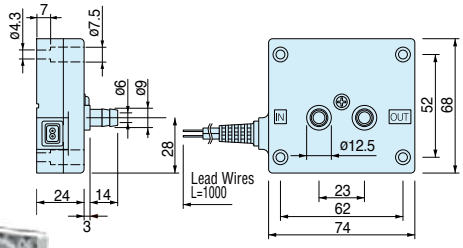

BPF type

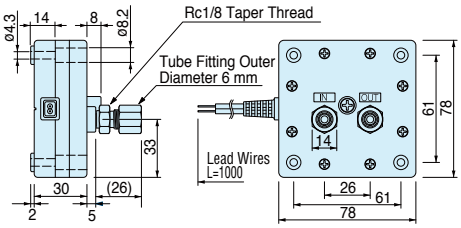

Model	Voltage(AC) —120V 60Hz Current (mA)	Self-priming Pressure(kPa)	FlowRate (mL/min)	Discharge Pressure (kPa)
BPS-215i	3	3	30	15
BPS-235G		1.5		
BPH-214i	15	8	350	18
BPH-214D				
BPH-214E				
BPH-214G		7		17
BPH-414i	30	12	500	35
BPH-414D				
BPH-414E				
BPH-414G		10	450	32
BPH-474G			400	35
BPH-474P				
BPF-465P	30	10	400	35

The performance data is measured at the rated conditions.

1)The reference data is based on water at 25 degrees Celsius with unloaded condition.

2)The ambient operating temperature range is from 5 to 50 degrees Celsius, the ambient liquid temperature range is from 5 to 50 degrees Celsius (non-freezing), and the ambient operating humidity range is from 35 to 85% (non-condensing). When the liquid temperature is low, the valve will be hardened. As a result, the flow rate will be decreased. This could be applied for liquids with high viscosity. The materials that will be under influence of the applied liquids are the housing, liquid contact sheets, valves, and O-rings. Please confirm the suitability under any applied conditions. Any minute quantities of additives and composite materials found in certain liquids may influence the performance of the unit several months later.

3)You may use the product at low voltage, but it will result in lower outlet pressure.

4)Performance may be compromised by restrictive tubing/piping or mounting position of the pump in the application.

5)The above performance data is measured at the rated condition as we described.

Note: The Bimor does not fulfill explosion-proof construction in any applications. Please install isolating transformers or similar protective devices on the wiring for your safety.

Compact, lightweight, durable & quiet

As the Bimorph also acts as a diaphragm it has no motors or shafts or other troublesome mechanisms, and thus minimal vibrations and fewer breakdowns. The Bimor is lighter, quieter and more durable than traditional pumps. We have achieved maintenance free continuous operation for 60 months.

Low power consumption & electromagnetic noise

The Bimor is driven by low energy consuming piezoelectric elements.
Consequently it costs very little to run and emits virtually no electromagnetic noise.

Simple flow rate adjustment

As the flow rate of the Bimor is proportional to the voltage and frequency, adjusting the flow rate is as simple as adjusting either one.
You may use the product at the rated voltage or lower.

Application versatility

The parts can be made of several different materials, so you can select the material appropriate to your needs, be it a liquid application. The Bimor is currently employed in a variety of different fields including medicine, scientific research, and the PC and chemical industries.
The following "Examples of suitable chemical liquids" should be used for reference only. Please confirm the suitability under any applied conditions by yourself.

	Voltage(AC) — 230V 50Hz					Liquid Surface Materials			Mass	Examples of suitable chemical liquids	Examples of unsuitable chemical liquids
	Model	Current (mA)	Self-priming Pressure(kPa)	FlowRate (mL/min)	Discharge Pressure (kPa)	Housing	Liquid Contact Sheet	Valve/O-ring	(g)		
BPS type	BPS-215i	4	0.4	10	10	PP	PP	IIR	40	Ethanol, Dilute hydrochloric acid, Sodium carbonate, Benzaldehyde, Formalin	Xylene, Mineral oil, Carbon tetrachloride, Trichloroethylene, Toluene, Benzene
	BPS-235G					POM	PTFE	FKM		Ethanol, Xylene, Silicone oil, Kerosene, Toluene, Benzene	Ammonia water, Hydrochloric acid, Hydrogen peroxide, Sodium hypochlorite, Nitric acid, Sulfuric acid
BPH type	BPH-214i	15	7	220	18	PP	PP	IIR	140	Ethanol, Dilute hydrochloric acid, Sodium carbonate, Benzaldehyde, Formalin	Xylene, Mineral oil, Carbon tetrachloride, Trichloroethylene, Toluene, Benzene
	BPH-214D							VMQ		Ammonia water, Ethanol, Dilute hydrogen peroxide, Sodium hypochlorite, Methanol	Caustic soda, Carbon tetrachloride, Silicone oil, Trichloroethylene, Toluene, Benzene
	BPH-214E							EPDM		Ammonia water, Ethanol, Hydrochloric acid, Caustic potash, Caustic soda, Methanol	Xylene, Mineral oil, Carbon tetrachloride Trichloroethylene, Toluene, Benzene
	BPH-214G				17		PTFE	FKM		Ethanol, Dilute hydrogen peroxide, Mineral oil, Sodium hypochlorite	Acetone, Ammonia water, Glacial acetic acid, Hydrofluoric acid, Formalin
							PP	IIR	140	Ethanol, Hydrochloric acid, Sodium carbonate, Benzaldehyde, Formalin	Xylene, Mineral oil, Carbon tetrachloride, Trichloroethylene, Toluene, Benzene
								VMQ		Ammonia water, Ethanol, Dilute hydrogen peroxide, Sodium hypochlorite, Methanol	Caustic soda, Carbon tetrachloride, Silicone oil, Trichloroethylene, Toluene, Benzene
								EPDM		Ammonia water, Ethanol, Hydrochloric acid, Caustic potash, Caustic soda, Methanol	Xylene, Mineral oil, Carbon tetrachloride Trichloroethylene, Toluene, Benzene
								FKM		Ethanol, Hydrogen peroxide, Mineral oil, Sodium hypochlorite	Acetone, Ammonia water, Glacial acetic acid, Hydrofluoric acid, Formalin
	BPH-274G	15	7	250	35	PPS	PTFE	FKM	170	Ethanol, Xylene, Carbon tetrachloride, Silicone oil, Trichloroethylene	Acetone, Ammonia water, Chlorosulfonic acid, Glacial acetic acid, Hydrofluoric acid, Formalin
	BPH-274P							FFKM FEP		Ethanol, Chloroform, Glacial acetic acid, Benzene, Methyl ethyl ketone	Chlorosulfonic acid, Fluorine oil, CFC 112, CFC 113
BPF type						PFA		FFKM FEP	350	Ethanol, Aqua regia, Ozone, Carbon tetrachloride, Concentrated nitric acid, Concentrated sulfuric acid, Fuming sulfuric acid	Fluorine oil, CFC 112, CFC 113
	BPF-265P	15	7	250	35				350		

Material Description

EPDM --- Ethylene Propylene Rubber
FEP------- Fluoroethylene Propylene
FFKM ---- Fluorine Rubber (Perfluoro)
FKM------ Fluorine Rubber
IIR ------- Butyl Rubber
POM ---- Polyacetal
PFA ------ Fluororesin (Perfluoroalkoxy)
PP ------- Polypropylene
PPS ------ Polyphenylene Sulphide
PTFE ---- Tetrafluororesin (Polytetrafluoroethylene)
VMQ ---- Dimethyl Silicon Rubber

Durability

Longevity test : Sample A, Sample B, Sample C, Sample D

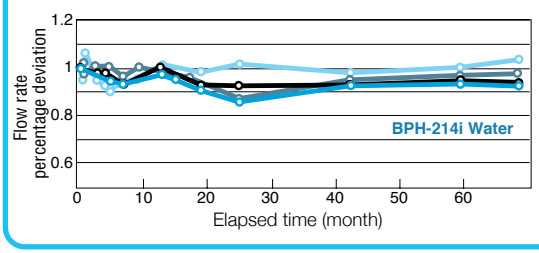

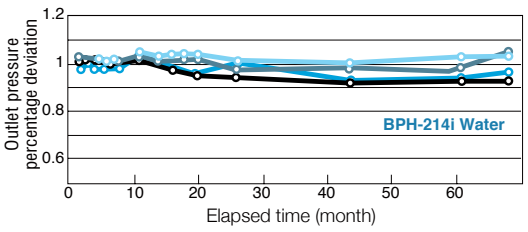

Piezoelectric Pump

BIMOR PUMP

Flow Rate Characteristic

BPS series

120V 60Hz type　　230V 50Hz type

Pressure-Flow Characteristics

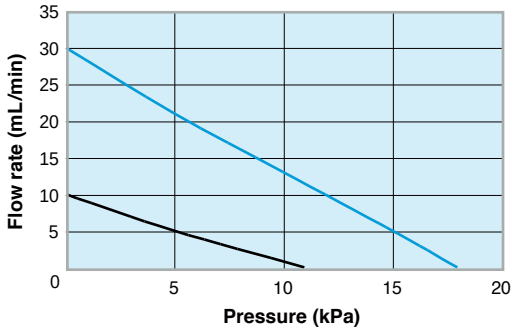

Frequency-Flow Characteristics

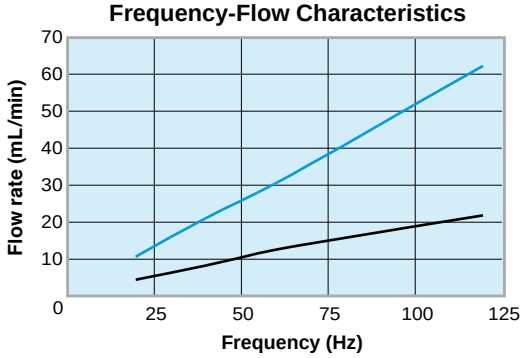

Voltage-Flow Characteristics

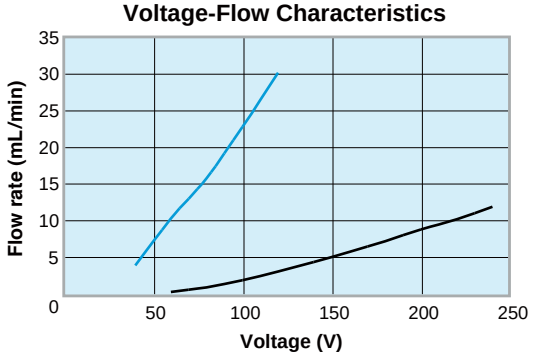

BPH series

(BPH-414i) 120V 60Hz type　　(BPH-214i) 120V 60Hz type　　(BPH-214i) 230V 50Hz type

Pressure-Flow Characteristics

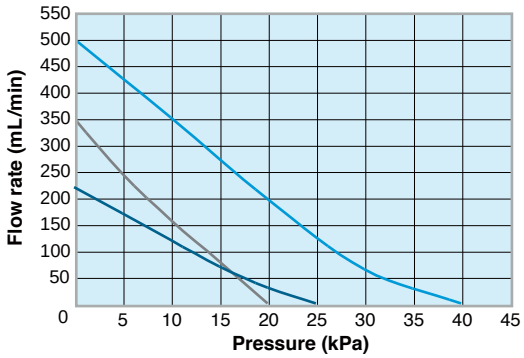

Frequency-Flow Characteristics

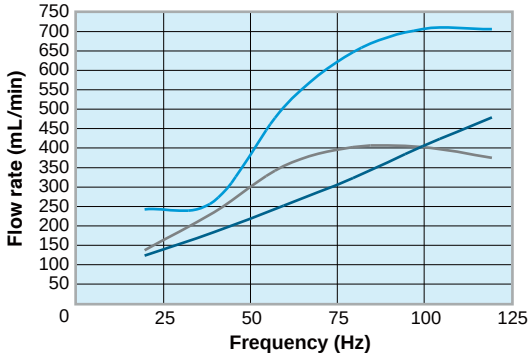

Voltage-Flow Characteristics

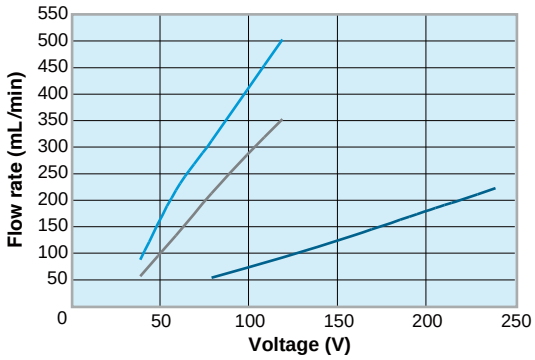

The Next Step in Pump Miniaturization

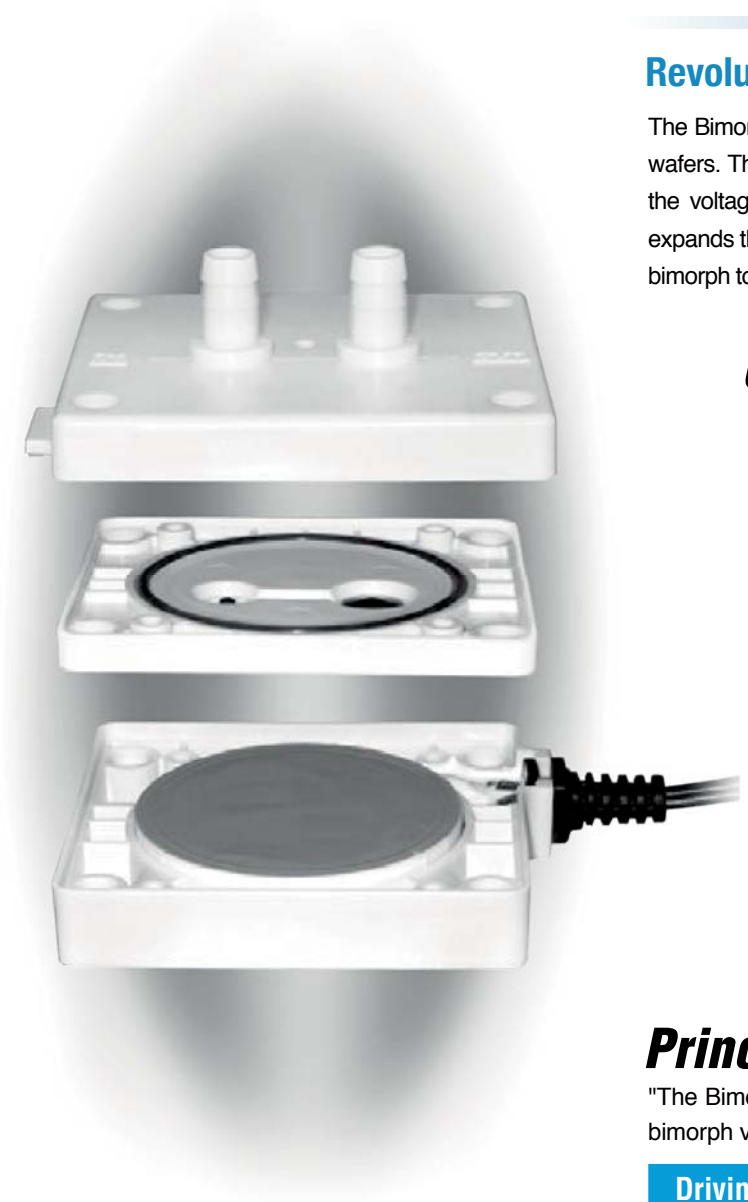

Revolutionary piezoelectric bimorph technology

The Bimor's driving force, the bimorph, comprises two parallel piezoelectric wafers. Their nature is to expand or contract depending on the direction of the voltage. Therefore when an alternating current is applied, one wafer expands then contracts while the other contracts then expands, causing the bimorph to bend. Repeating the cycle creates the pumping action.

Cross section

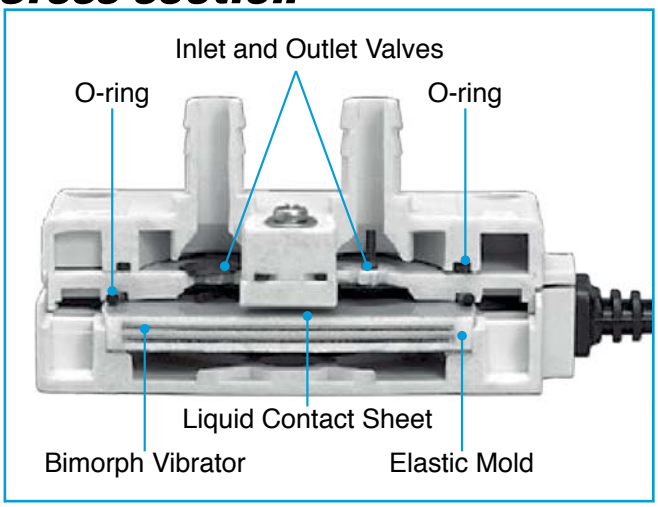

Principle / Structure

"The Bimor pump" uses the displacement operation of the piezoelectric bimorph vibrator as the direct source of the pumping action.

Driving Power : Piezoelectric Bimorph Winding

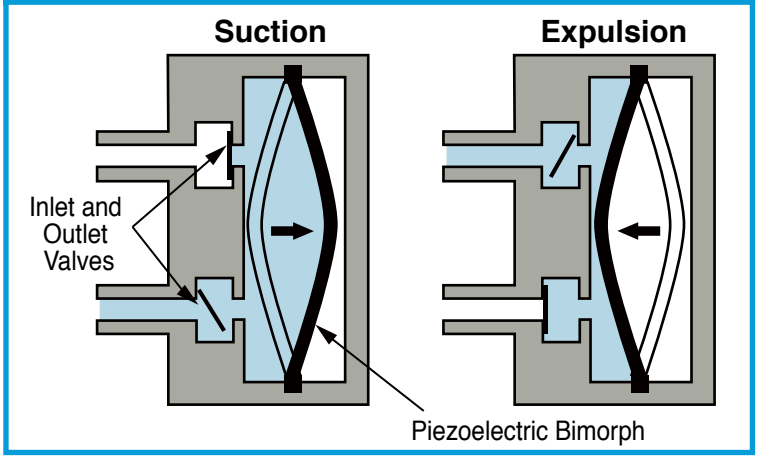

DC Liquid Pump

DPE series

- ***Built-in Pulse Absorption Chamber***
- ***Many build material options for different liquids***
- ***Self-priming type with air suction acceptable***

Typical Conventional Pump without Pulse Absorption

As liquid is transported through the suction and discharge passages of the pump and liquid circuit, high pulsations can be created which can cause cavitation, vibration in tubing, fittings, peak pulsing noises, and added stress and wear to pump mechanisms. These negative results are often increased through the use of small pumps having relatively high rotational speeds.

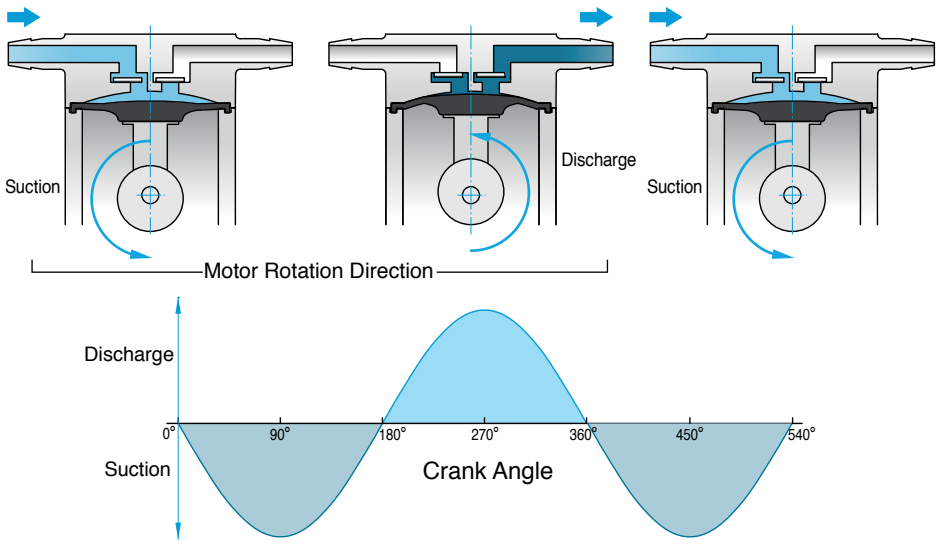

Advanced design DPE Pump with Pulse Absorption

Provides pulse attenuation which helps to create steady state flow, reduced noise and vibration throughout the fluid circuit, and enhances life of the pump and other circuit components. It's designed in. . . No need for additional installation cost or space with pulsation dampers.

① Suction

② Discharge. Partial fluid delivery to pulse absorption chamber, not directly forced to outlet port.

③ Cyclical suction drawn into pump is synchronized with the discharge.

Pulses are attenuated through the process of ② and ③.

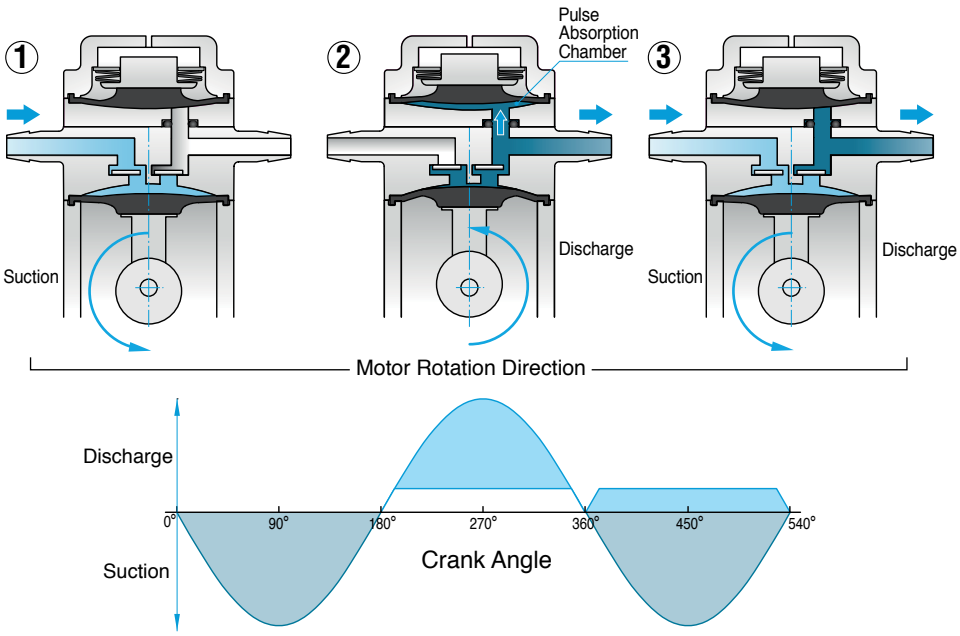

DC Liquid Pump

Model DPE-100

Brush DC Motor **24 V DC**

Flow & Electric Current

Flow Characteristics (Water at 25˚C)

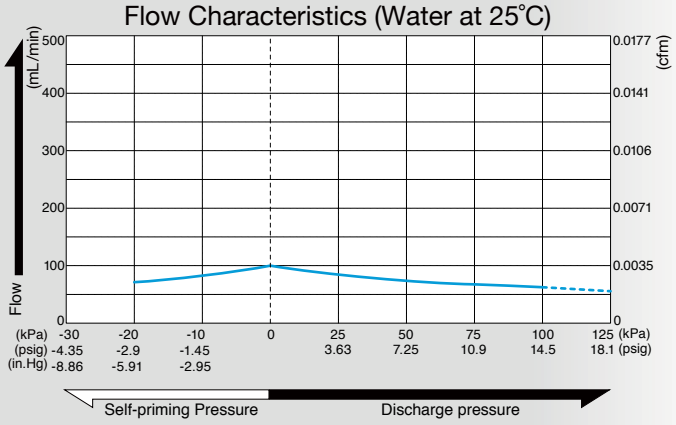

Current Characteristics

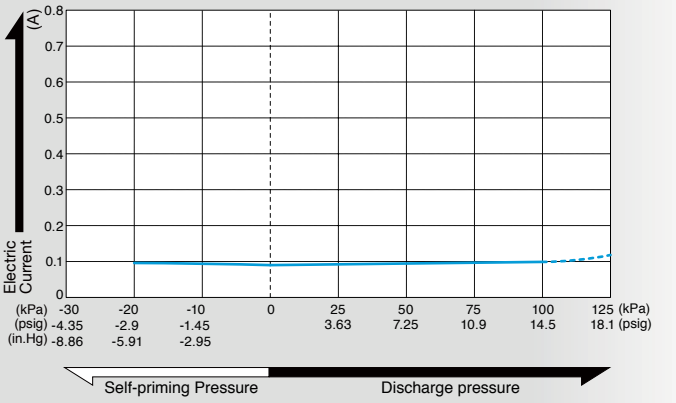

Specifications

Rated Voltage	24 V DC
Flow Rate *1	100 mL/min 0.0035 cfm
Working Pressure Range	0 to 100 kPa 0 to 1 bar 0 to 14.2 psig
Maximum Pressure *2	300 kPa 3 bar 42.7 psig
Maxumu Current	100 mA
Duty Cycle	Continuous
Rated Performance (MTTF) *2	500 hours
Self-priming Pressure *1	20 kPa 0.2 bar 2.84 psig
Inlet	4.7 mm O.D. straight barb
Outlet	4.7 mm O.D. straight barb
Insulation Classification	E class equivalent
Mounting Dimensions	9.5 (L) x 17 (W) mm 3/8"(L) x 43/64"(W)
Weight	67 g 0.148 Lbs
Motor	Brush DC Motor

*1. When the check valve is hardened due to low liquid temperature,self-priming performance and flow rate will go down.
*2. Restarting pumps with flow passage closed is impossible.
Please read the page of "How to Use This Catalog" first for correct use of compressors and pumps.

Build materials and applicable fluids

Model	Cylinder Head	Head Cover	Diaphragm	Valve	O-ring	Applicable fluids
DPE-400-2E	PA Polyamide(Nylon)		PTFE Polytetrafluoroethylene	EPDM	Ethylene-propylene rubber	Sodium hydroxide, Citric acid Ammonia water, Caustic potash
DPE-400-2G				FKM Fuluoro rubber		Ethanol, Ethylene glycol Sodium carbonate, mineral oil
DPE-400-7G	PPS Polyphenylene sulfide					Xylene, Carbon tetrachloride Trichloroethylene, Silicon oils
DPE-400-7P				FFKM Perfluoroelastomer		Chloroform, Benzene Glacial acetic acid, Methyl ethyl ketone

Application Examples

- Liquid analytical instruments e.g. medical, food, water treatment & environmental.
- Liquid transport within filtration, sampling, sterilizers and washers.
- Ink transport within industrial ink-jet printers.

Dimensional Outline Drawing (Unit: mm)

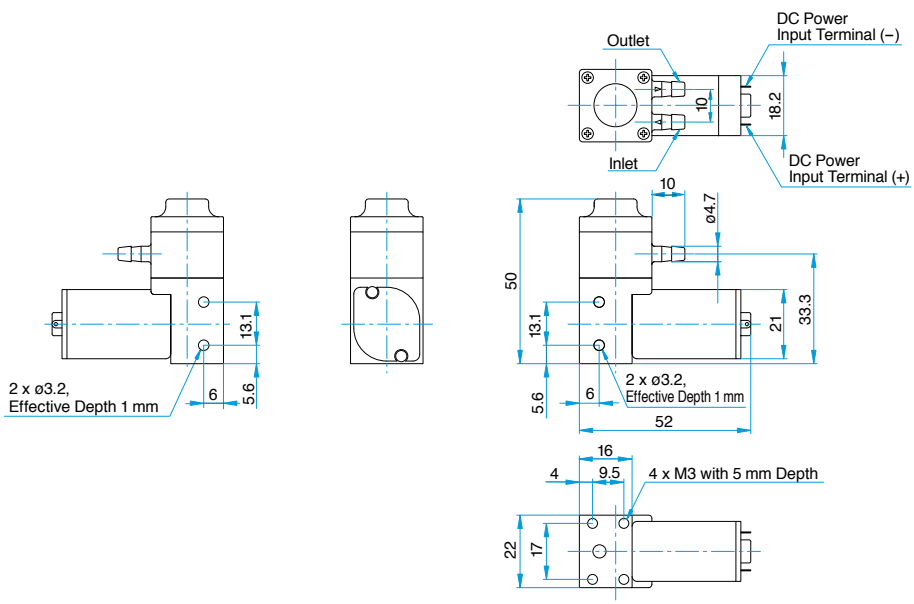

DC Liquid Pump

Model DPE-400

Brush DC Motor **24 V DC**

Flow & Electric Current

Flow Characteristics (Water at 25˚C)

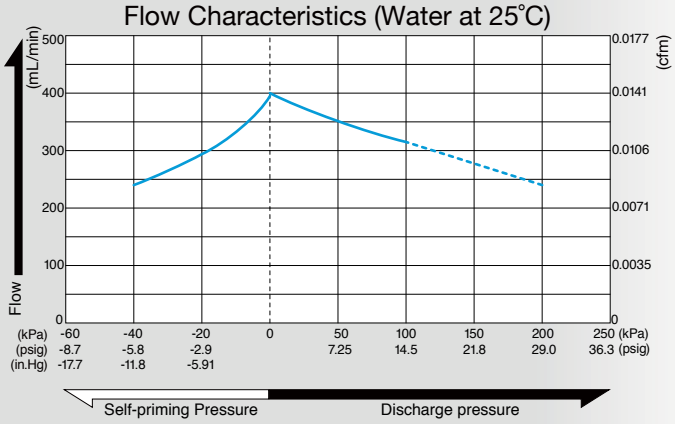

Current Characteristics

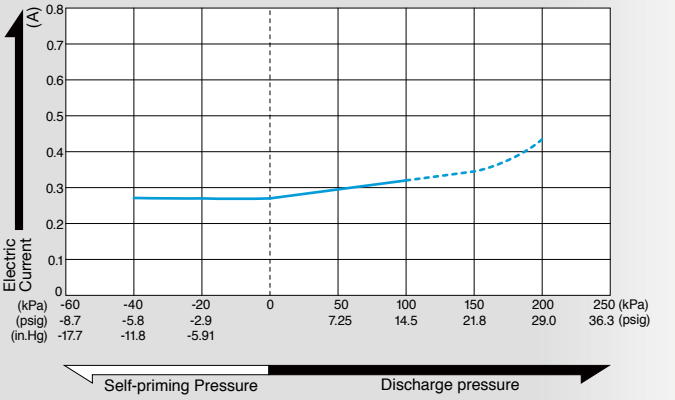

Specifications

Rated Voltage	24 V DC
Flow Rate *1	400 mL/min 0.0141 cfm
Working Pressure Range	0 to 100 kPa 0 to 1 bar 0 to 14.2 psig
Maximum Pressure *2	300 kPa 3 bar 42.7 psig
Maxumu Current	345 mA
Duty Cycle	Continuous
Rated Performance (MTTF)	500 hours
Self-priming Pressure	40 kPa 0.4 bar 5.69 psig
Inlet	5.4 mm O.D. straight barb
Outlet	5.4 mm O.D. straight barb
Insulation Classification	F class equivalent
Mounting Dimensions	19 (L) x 26 (W) mm 3/4"(L) x 1-1/32"(W)
Weight	187 g 0.412 Lbs
Motor	Brush DC Motor

*1. When the check valve is hardened due to low liquid temperature,self-priming performance and flow rate will go down.
*2. Restarting pumps with flow passage closed is impossible.
Please read the page of "How to Use This Catalog" first for correct use of compressors and pumps.

Build materials and applicable fluids

Model	Cylinder Head	Head Cover	Diaphragm	Valve	O-ring	Applicable fluids
DPE-400-2E	PA Polyamide(Nylon)		PTFE Polytetrafluoroethylene	EPDM Ethylene-propylene rubber		Sodium hydroxide, Citric acid Ammonia water, Caustic potash
DPE-400-2G				FKM Fuluoro rubber		Ethanol, Ethylene glycol Sodium carbonate, mineral oil
DPE-400-7G	PPS Polyphenylene sulfide					Xylene, Carbon tetrachloride Trichloroethylene, Silicon oils
DPE-400-7P				FFKM Perfluoroelastomer		Chloroform, Benzene Glacial acetic acid, Methyl ethyl ketone

Application Examples

- Liquid analytical instruments e.g. medical, food, water treatment & environmental.
- Liquid transport within filtration, sampling, sterilizers and washers.
- Ink transport within industrial ink-jet printers.

Dimensional Outline Drawing (Unit: mm)

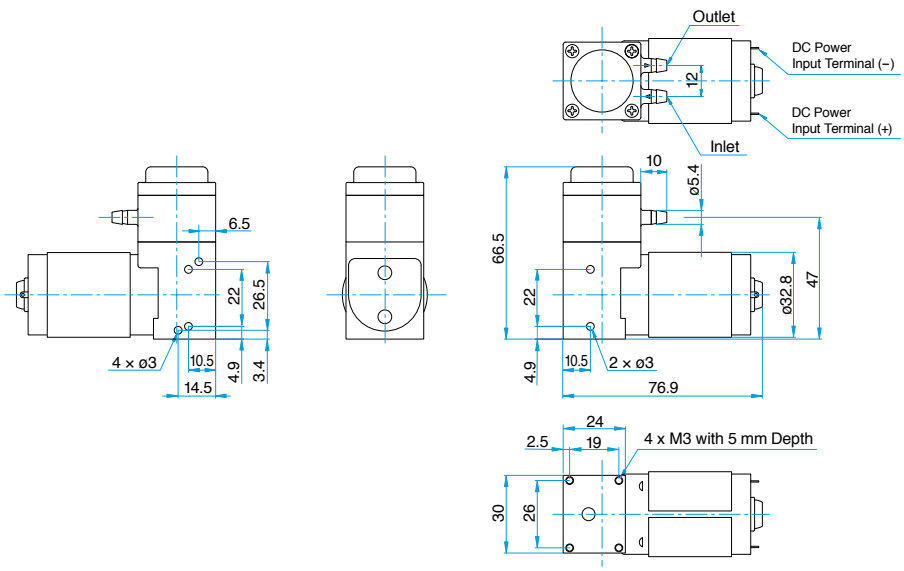

DC Liquid Pump

Model DPE-400BL

Brushless DC Motor **24 V DC**

Flow & Electric Current

Flow Characteristics (Water at 25°C)

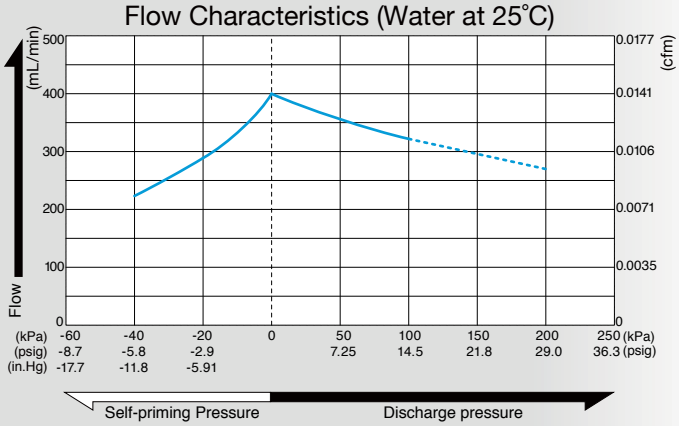

Current Characteristics

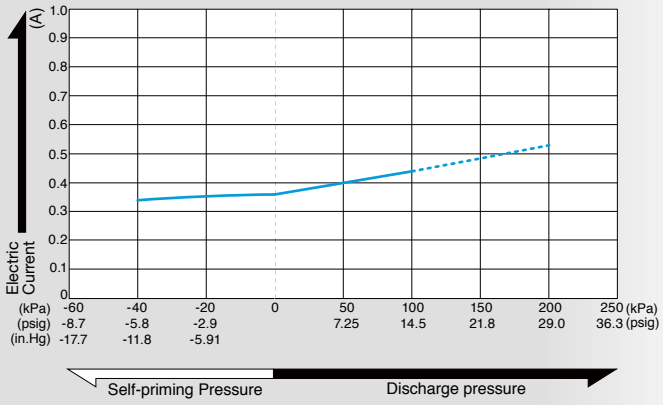

Specifications

Rated Voltage	24 V DC
Flow Rate *1	400 mL/min 0.0141 cfm
Working Pressure Range	0 to 100 kPa 0 to 1 bar 0 to 14.2 psig
Maximum Pressure *2	300 kPa 3 bar 42.7 psig
Maxumu Current	450 mA
Duty Cycle	Continuous
Rated Performance (MTTF) *2	6,000 hours
Self-priming Pressure *1	40 kPa 0.4 bar 5.69 psig
Inlet	5.4 mm O.D. straight barb
Outlet	5.4 mm O.D. straight barb
Insulation Classification	A class equivalent
Mounting Dimensions	41 (W) mm 1-39/64 "(W)
Weight	230 g 0.507 Lbs
Motor	Brushless DC Motor

*1. At low temperature, the performance may reduce.
*2. Pumps may not re-start against high backpressure.
*3. Life expectancy is based on the following conditions:
Rated voltage: 24 V DC, Atmospheric pressure: 0 kPa, Fluid: water at 25°C°C
Please read the page of "How to Use This Catalog" first for correct use of compressors and pumps.

Build materials and applicable fluids

Model	Cylinder Head	Head Cover	Diaphragm	Valve	O-ring	Applicable fluids
DPE-400BL-2E	PA Polyamide(Nylon)		PTFE Polytetrafluoroethylene	EPDM Ethylene-propylene rubber		Sodium hydroxide, Citric acid Ammonia water, Caustic potash
DPE-400BL-2G				FKM Fuluoro rubber		Ethanol, Ethylene glycol Sodium carbonate, mineral oil
DPE-400BL-7G	PPS Polyphenylene sulfide					Xylene, Carbon tetrachloride Trichloroethylene, Silicon oils
DPE-400BL-7P				FFKM Perfluoroelastomer		Chloroform, Benzene Glacial acetic acid, Methyl ethyl ketone

Application Examples

- Liquid analytical instruments e.g. medical, food, water treatment & environmental.
- Liquid transport within filtration, sampling, sterilizers and washers.
- Ink transport within industrial ink-jet printers.

Dimensional Outline Drawing (Unit: mm)

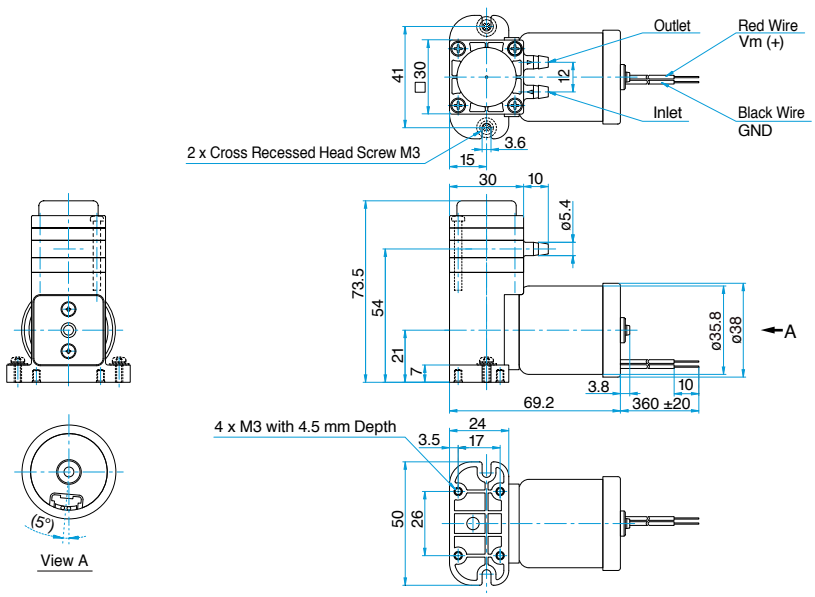

DC Liquid Pump

Model DPE-800

Brush DC Motor **24 V DC**

Flow & Electric Current

Flow Characteristics (Water at 25˚C)

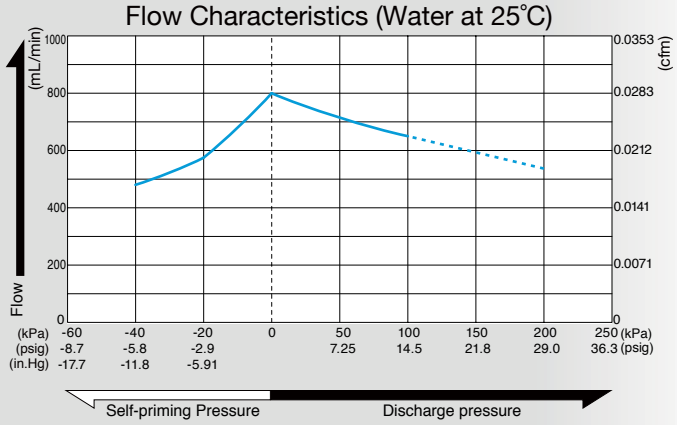

Current Characteristics

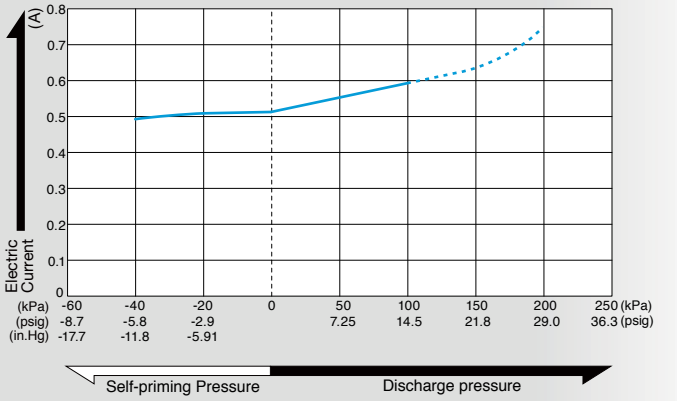

Specifications

Rated Voltage	24 V DC
Flow Rate *1	800 mL/min 0.0283 cfm
Working Pressure Range	0 to 100 kPa 0 to 1 bar 0 to 14.2 psig
Maximum Pressure *2	300 kPa 3 bar 42.7 psig
Maxumu Current	600 mA
Duty Cycle	Continuous
Rated Performance (MTTF)	600 hours
Self-priming Pressure	40 kPa 0.4 bar 5.69 psig
Inlet	5.4 mm O.D. straight barb
Outlet	5.4 mm O.D. straight barb
Insulation Classification	E class equivalent
Mounting Dimensions	74.5 (L) x 41 (W) mm 2-15/16"(L) x 1-39/64"(W)
Weight	350 g 0.771 Lbs
Motor	Brush DC Motor

*1.When the check valve is hardened due to low liquid temperature,self-priming performance and flow rate will go down.
*2.Restarting pumps with flow passage closed is impossible.
*3.Tubing between two pumping heads must be done in parallel.
Tubing in series between the two pumping heads should not be made. This may cause extreme pressure hike that will result in broken parts, liquid splash out or possible ignition.
Please read the page of "How to Use This Catalog" first for correct use of compressors and pumps.

Build materials and applicable fluids

Model	Cylinder Head	Head Cover	Diaphragm	Valve	O-ring	Applicable fluids
DPE-800-2E	PA Polyamide(Nylon)		PTFE Polytetrafluoroethylene	EPDM Ethylene-propylene rubber		Sodium hydroxide, Citric acid Ammonia water, Caustic potash
DPE-800-2G				FKM Fuluoro rubber		Ethanol, Ethylene glycol Sodium carbonate, mineral oil
DPE-800-7G	PPS Polyphenylene sulfide					Xylene, Carbon tetrachloride Trichloroethylene, Silicon oils
DPE-800-7P				FFKM Perfluoroelastomer		Chloroform, Benzene Glacial acetic acid, Methyl ethyl ketone

Application Examples

- Liquid analytical instruments e.g. medical, food, water treatment & environmental.
- Liquid transport within filtration, sampling, sterilizers and washers.
- Ink transport within industrial ink-jet printers.

Dimensional Outline Drawing (Unit: mm)

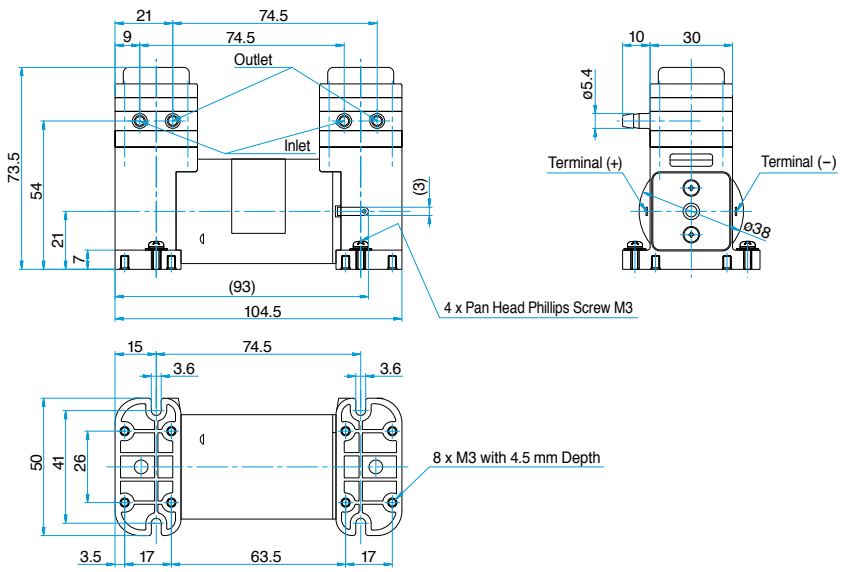

LA BLOWER

AC Linear

Free Piston Blower

Page

Blower

Model LA-28B & LA-45C

120V (60Hz) | 230/240V (50/60Hz) LA-28B | 230V (50/60Hz) LA-45C

Airflow Characteristics

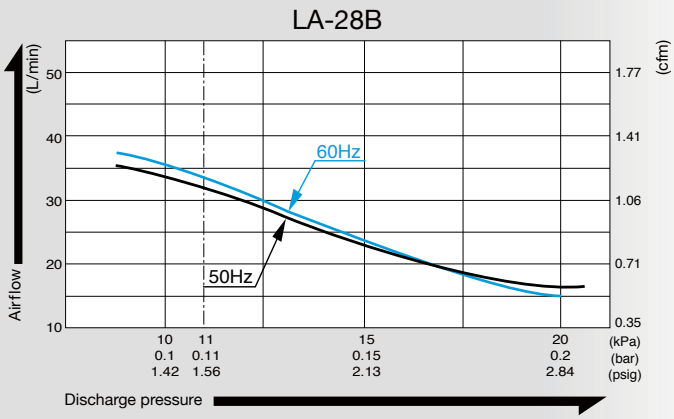

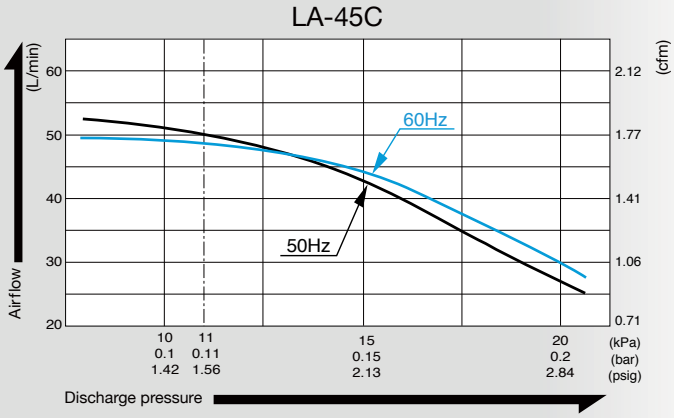

Specifications

	LA-28B		LA-45C	
Power Supply	120 V AC	220/230/240 V AC	120 V AC	220/230/240 V AC
Rated Frequency	60 Hz	50 Hz	60 Hz	50 Hz
Power Consumption	25.5 W	29 W	45 W	47 W
Rated Pressure	11 kPa (0.11 kgf/cm^2) 0.11 bar 1.56 psig			
Rated Airflow	28 L/min 0.99 cfm		45 L/min 1.59 cfm	
Weight	2.9 kg 6.4 lbs		3.2 kg 7.1 lbs	

Please read the page of "How to Use This Catalog" first for correct use of compressors and pumps.

Optional Hose Assemblies

LB03185	LA97475
	

Application Examples

Liquid Mixer Bubbling

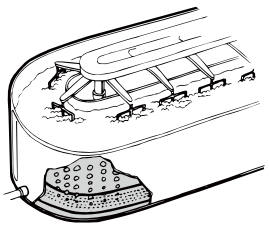

Fish Farm Aquatic Fence

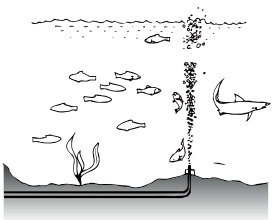

Dimensional Outline Drawing (Unit: mm)

LA-28B

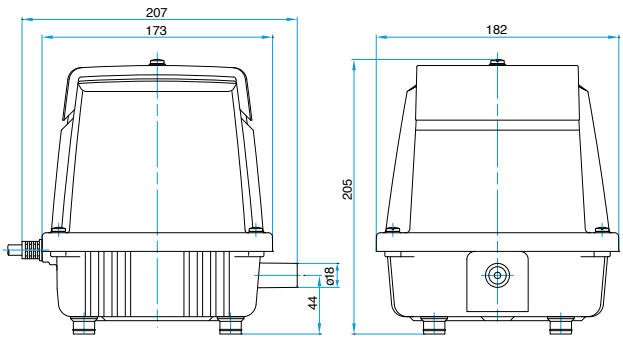

LA-45C

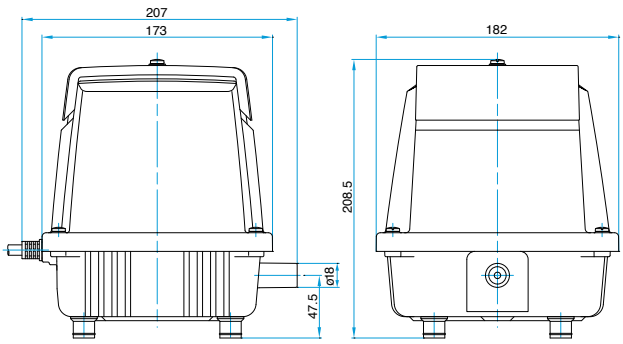

Blower

Model LA-60B & LA-80B

120V (60Hz) | 230V (50Hz) LA-60B | 230/240V (50Hz) LA-80B

Airflow Characteristics

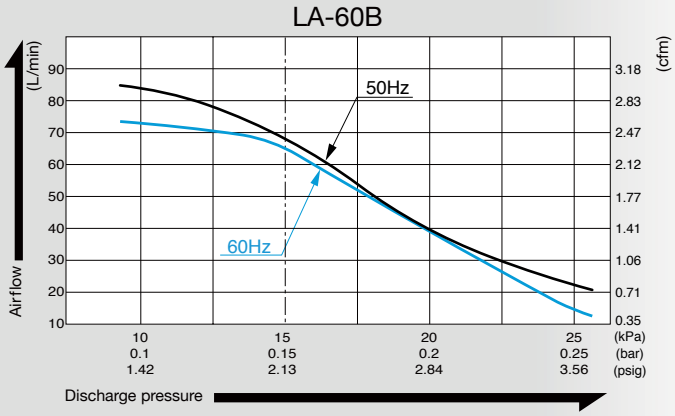

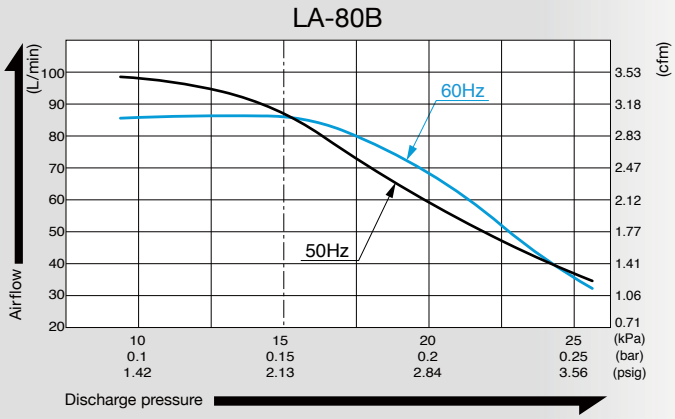

Specifications

	LA-60B		LA-80B	
Power Supply	120 V AC	220/230/240 V AC	120 V AC	220/230/240 V AC
Rated Frequency	60 Hz	50 Hz	60 Hz	50 Hz
Power Consumption	60 W	64 W	80 W	86 W
Rated Pressure	15 kPa (0.15 kgf/cm^2) 0.15 bar 2.13 psig			
Rated Airflow	60 L/min 2.12 cfm		80 L/min 2.83 cfm	
Weight	5.0 kg 11 lbs		5.3 kg 11.7 lbs	

Please read the page of "How to Use This Catalog" first for correct use of compressors and pumps.

Optional Hose Assemblies

LB03185	LA97475
	

Application Examples

Liquid Mixer Bubbling

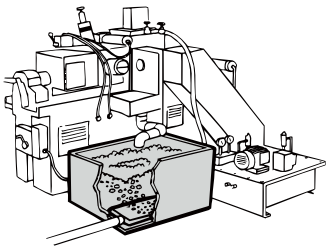

Home Aerobic Sewage Treatment System

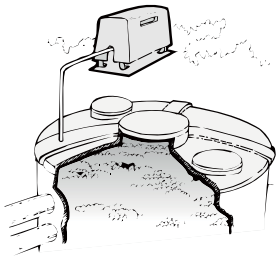

Dimensional Outline Drawing (Unit: mm)

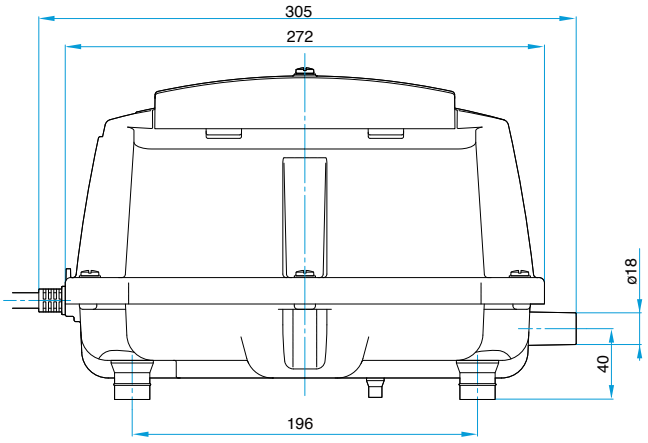

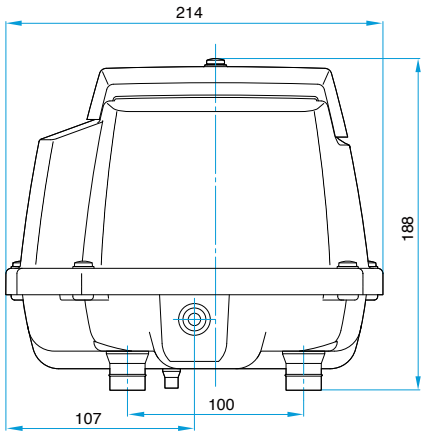

Blower

Model LA-60ECO & LA-80ECO

CE 230/240V (50Hz)

Airflow Characteristics

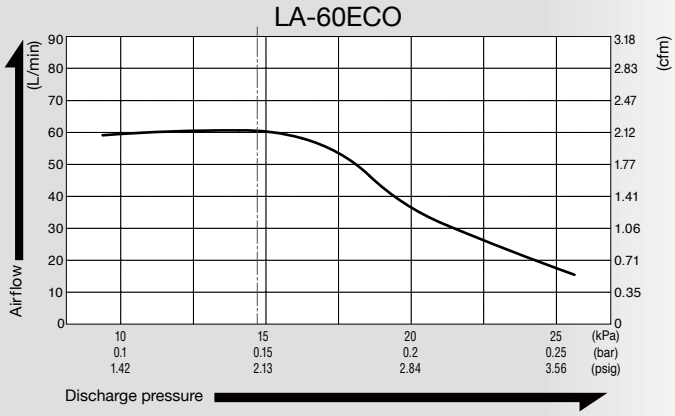

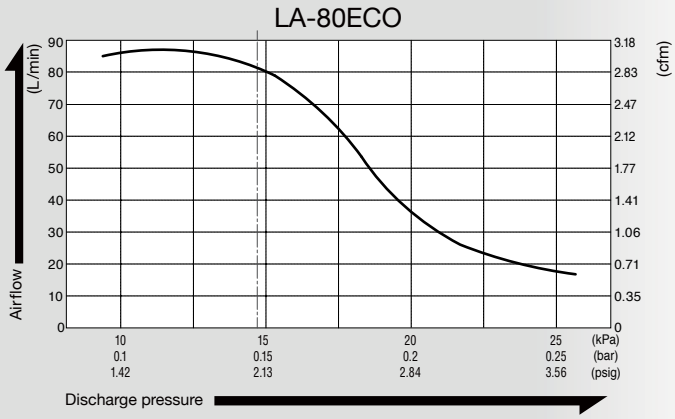

Specifications

	LA-60ECO	LA-80ECO
Power Supply	230 V AC *	
Rated Frequency	50 Hz	
Power Consumption	35 W	51 W
Rated Pressure	15 kPa (0.15 kgf/cm^2) 0.15 bar 2.13 psig	
Rated Airflow	60 L/min 2.12 cfm	80 L/min 2.83 cfm
Weight	4.3 kg 9.5 lbs	6.1 kg 13.4 lbs

*Only avaibable in 230V
Please read the page of "How to Use This Catalog" first for correct use of compressors and pumps.

Optional Hose Assemblies

LB03185	LA97475
	

Application Examples

Liquid Mixer Bubbling

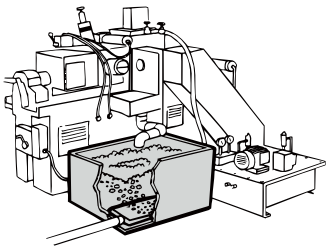

Home Aerobic Sewage Treatment System

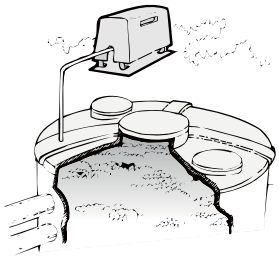

Dimensional Outline Drawing (Unit: mm)

LA-60ECO

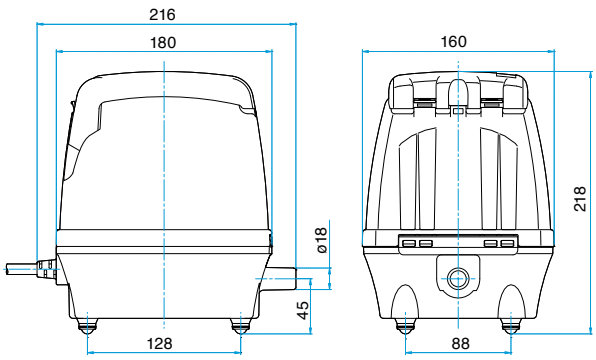

LA-80ECO

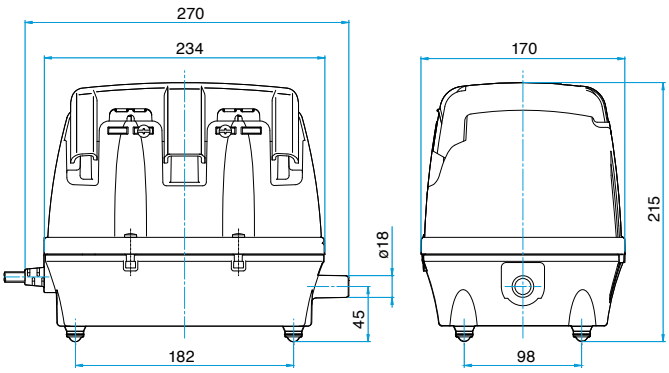

Blower

Model LA-100A & LA-120A

CE 230V (50Hz) LA-100A
CE 230/240V (50Hz) LA-120A

Airflow Characteristics

LA-100A

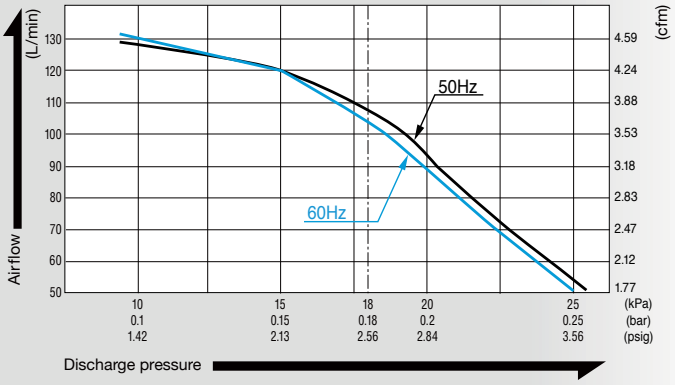

LA-120A

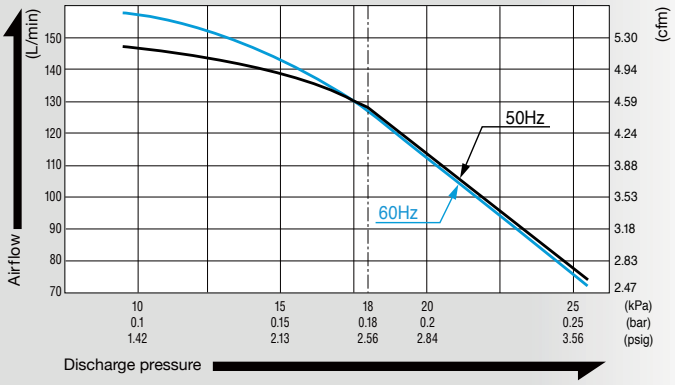

Specifications

	LA-100A		LA-120A	
Power Supply	120 V AC	220/230/240 V AC	120 V AC	220/230/240 V AC
Rated Frequency	60 Hz	50 Hz	60 Hz	50 Hz
Power Consumption	95 W	100 W	118 W	130 W
Rated Pressure	18 kPa (0.18 kgf/cm^2) 0.18 bar 2.56 psig			
Rated Airflow	100 L/min 3.53 cfm		120 L/min 4.24 cfm	
Weight	9.7 kg 21.4 lbs			

Please read the page of "How to Use This Catalog" first for correct use of compressors and pumps.

Optional Hose Assemblies

LB03965	LB01070
	

Application Examples

Liquid Mixer Bubbling

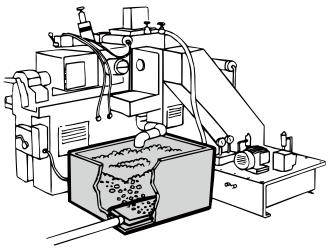

Home Aerobic Sewage Treatment System

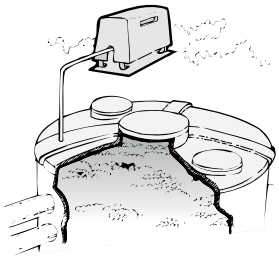

Dimensional Outline Drawing (Unit: mm)

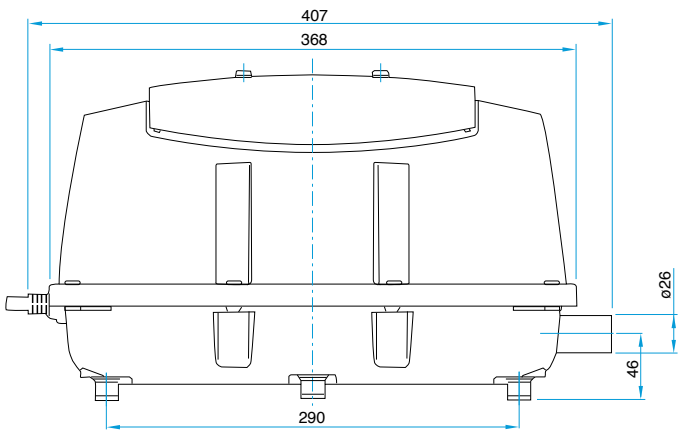

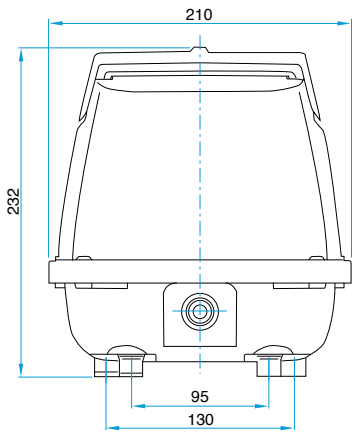

Blower

Model LAM-150 & LAM-200

CE 230V (50Hz) — LAM-150
UL 120V (60Hz), CE 230/240V (50Hz) — LAM-200

Airflow Characteristics

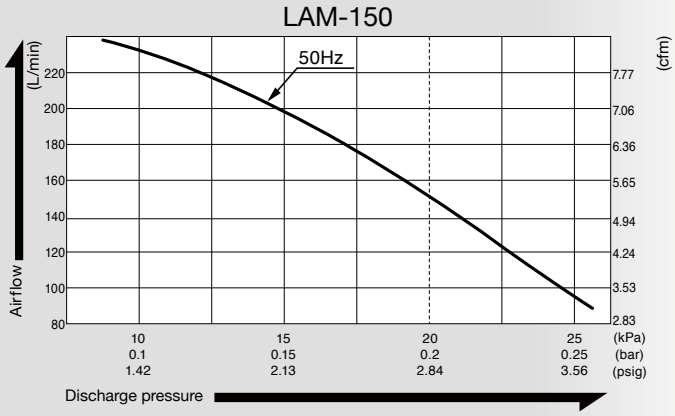

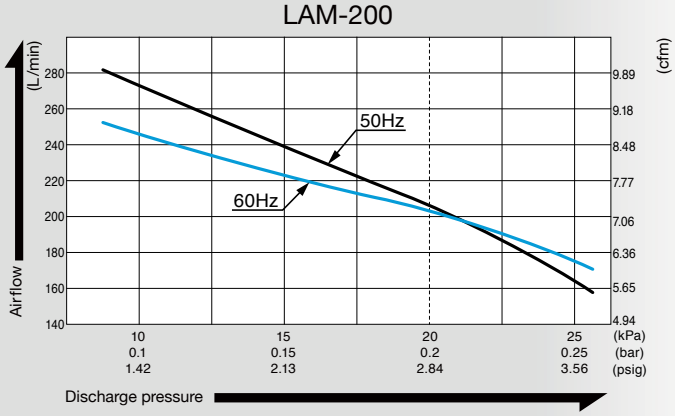

Specifications

	LAM-150	LAM-200	
Power Supply	230 V AC	120 V AC	230/240 V AC
Rated Frequency	50 Hz	60 Hz	50 Hz
Power Consumption	140 W	215 W	
Rated Pressure	20 kPa (0.2 kgf/cm^2) 0.2 bar 2.84 psig		
Rated Airflow	150 L/min 5.3 cfm	200 L/min 7.06 cfm	
Weight	12.3 kg 27.1 lbs	12.3 kg 27.1 lbs	

Please read the page of "How to Use This Catalog" first for correct use of compressors and pumps.

Optional Hose Assemblies

LB03965	LB01070
	

Application Examples

Grease Trap

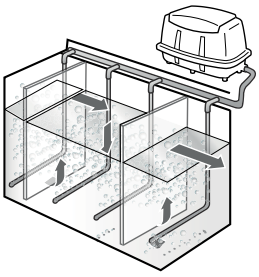

Home Aerobic Sewage Treatment System

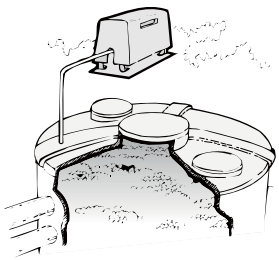

Dimensional Outline Drawing (Unit: mm)

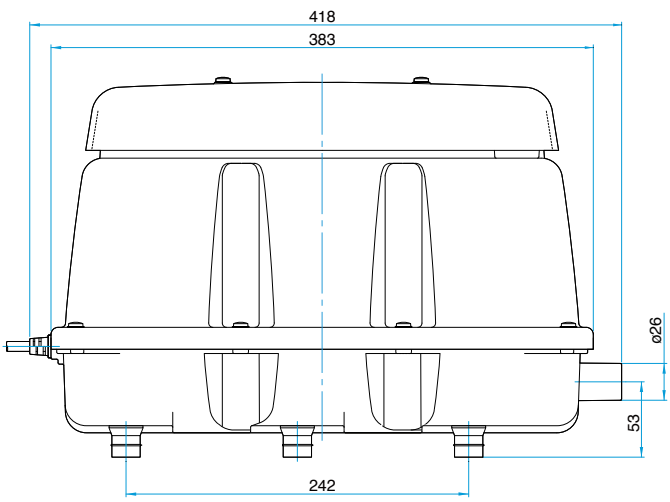

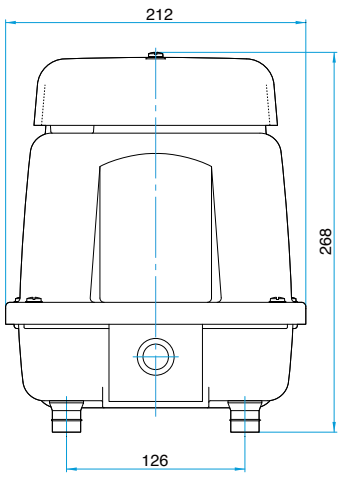

OTHER PRODUCTS

LINICON (VACUUM PUMP)

Page

LV-125A

LINICON (Vacuum Pump)

Model LV-125A

Oil-less Compressor

- **AC linear free piston vacuum pump**
- **Equipped with fuse and removable power cable**
- **Compact and lightweight**
- **Low noise level**
- **Oil-less construction**

Specifications

Rated Voltage	115 V AC	230 V AC
Power Consumption	14 W	15 W
Rated Frequency	60 Hz	50 Hz
Maximum Vacuum	-33.3 kPa (-250 mm Hg, -333 mbar, -9.84 in. Hg)	
Dimensions	135 (L) x 91 (W) x 146 (H) mm (5-5/16" x 3-37/64" x 5-3/4")	
Duty Cycle	Continuous	
Coil Insulation Class	B or its equivalent	E or its equivalent
Weight	1.5 kg (3.3 lbs.)	

Please read the page of "How to Use This Catalog" first for correct use of compressors and pumps.

Vacuum Pick-Up Set

If the following options are prepared together with Model LV-125A, the Vacuum Pick-Up Set can be arranged.

- LB07629 Vacuum pen assembly
- LQ01267 Tube 3 x 5 x 2000
- LA71242 Needle 1 x 1.5 x 40 (6 pcs/set)
- LP30884 Pad 6 mm dia.
- LP30885 Pad 4 mm dia.
- LA71143 Pen stand

The needle can be bent in accordance with applications.

High Adsorption Power

In the case that the depth of vacuum is -33.3 kPa (-250 mmHg) and the surface to be vacuumed is flat.

Pad Diameter	A Suction power when the adsorption face is placed horizontally and moved upward.	B Suction power when the adsorption face is placed vertically and moved laterally.
4 mm	20 g	10 g
6 mm	50 g	25 g

Adsorption power: W (g) = D^2 x 7.85 x 250/736

A is calculated by multiplying the safety rate of 0.5 to the above equation, and then rounded.

B is calculated by multiplying the safety rate of 0.25 to the above equation, and then rounded.

Application Examples

Transferring spherical objects such as balls

Assembling precision parts

Moving tiny parts

Transferring uneven parts

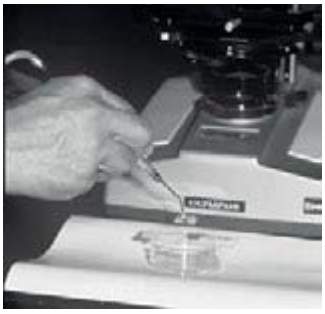

Most suitable for handling electronic parts such as ICs and LSIs. Also small parts, micro parts such as those in watches and chemicals.

CUPLA

Cuplas, Quick Connect Couplings, Enable Flexible, Fast, and Secure Connections in Various Fluid Lines.

Plastic Cupla BC Type Valveless

For low pressure air piping

Working pressure	Valve structure	Applicable fluid
0.07MPa {0.7kgf/cm²}	Straight through	Air

- To connect, just push the plug into the socket.
- Plastic makes this ideal for use in environment prone to rusting.
- Compact and light weight for easy handling.
- Valveless construction gives more stable flow.

Cube Cupla

Small and lightweight coupling for air supply lines to medical and/or scientific equipment

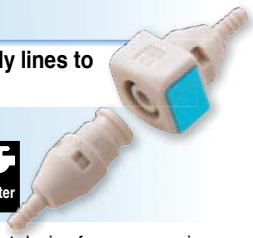

Working pressure	Valve structure			Applicable fluids	
0.07MPa {0.7kgf/cm²}	Two-way shut-off	One-way shut-off	Straight through	Air	Water

- Ultra-lightweight, made of polyacetal resin. Compact design for space saving.
- Just push plug into socket for connection. Simply press the button on the socket for disconnection.
- Both socket and plug have built-in valve types and valveless types. Valveless structure suits high viscosity fluids.
- Suitable for a wide range of applications from medical/scientific equipment to beverage machines or semiconductor manufacturing devices.

Micro Cupla

For piping in pneumatic control devices

Working pressure	Valve structure	Applicable fluids	
1.0MPa {10kgf/cm²}	One-way shut-off	Air	Water

- Even though the valve is built in the socket, the sleeve outer diameter is confined to 9.5 mm.
- Compact design for piping in narrow spaces.
- Push-to-connect operation. Tube Fitter type for even easier tube insertion.
- Plated brass and stainless bodies are available for excellent corrosion resistance.
- Available in various end configurations to satisfy a wide range of pneumatic applications.

Small Cupla

Lightweight and compact for use on air lines and scientific equipment

Working pressure	Valve structure	Applicable fluids	
0.7MPa {7kgf/cm²}	One-way shut-off	Air	Water

- Compact socket with built-in valve and 14 mm OD sleeve.
- Just push in the plug to the socket for connection.
- Also available with quick connect/disconnect Tube Fitter type.
- Chrome-plated brass for corrosion resistance adopted for the body.
- Available in various end configurations to satisfy a wide range of pneumatic applications.

Super Cupla

Light, compact for air piping connections

Working pressure	Valve structure	Applicable fluid
1.0MPa {10kgf/cm²}	One-way shut-off	Air

- Lightweight design suits direct connection to power tools.
- Push-to-connect for easy operation.
- Also available with quick connect/disconnect Tube Fitter type.
- Chrome-plated steel for corrosion resistance adopted for the body. (Partly aluminum)
- Available in various end configurations for a wide range of pneumatic applications.

Hi Cupla 200

Push-to-connect type for air lines

Working pressure	Valve structure	Applicable fluid
1.5MPa {15kgf/cm²}	One-way shut-off	Air

- Just push the plug into the socket for simple and secure connection.
- New valve design for low pressure loss to achieve flow rate increase (15% up over the conventional model).
- End-face seal is achieved when connected.
- Enhanced operability with low connection resistance.
- End-face seal design is superior to external seal with an O-ring due to no seal damage caused by exhausted lubrication.
- Also available with quick connect/disconnect Tube Fitter type.

Hi Cupla

Universal purpose couplings for air lines

Working pressure		Valve structure	Applicable fluids (Steel applies to air only)	
1.5MPa {15kgf/cm²}	1.0MPa {10kgf/cm²}	One-way shut-off	Air	Water

- An excellent general purpose coupling for connecting factory air supply to pneumatic tools.
- Steel coupling is suitable for air. Brass or stainless steel is suitable for water.
- Critical structural parts of steel models are heat-treated for increased strength giving greater durability and resistance to wear.
- Available in various body materials, sizes and end configurations applicable to a wide range of applications.

Hi Cupla Ace

Lightweight plastic coupling with automatic safety lock for air line applications

Working pressure	Valve structure	Applicable fluids	
1.5MPa {15kgf/cm²}	One-way shut-off	Air	Water

- Pressure ratings comparable to steel Cuplas.
- A built in “automatic lock mechanism” locks the sleeve upon connection, thus prevents accidental disconnection.
- Just push plug into socket for simple connection.
- The weight is a quarter of steel Hi Cupla for easy handling.
- Can be used for air and water.

For more information, please visit http://www.nitto-kohki.co.jp/e/prd/d_cat/ and see our eCatalog here.

Safety Guide

Be sure to carefully read the following precautions and the operation manual that comes with the product before use.

Precautions for Compressors and Vacuum Pumps

⚠ CAUTION

⚠ WARNING **Do not let the unit draw in or discharge any gas other than air.** This may cause an explosion, fire or electric shock.

Avoid drawing in water and splashing any water on the unit. Otherwise there is the risk of a short circuit causing a fire or electric shock.

The unit must be incorporated into a device that has an appropriate case and wiring. Not doing so may cause a fire, electric shock or burns.

Avoid any strong impact to the unit as this may reduce the performance and durability of the unit.

Do not use the unit with a power supply other than the voltage shown on the unit. Doing so may cause a fire or electric shock.	**Do not install the unit in a completely enclosed case (box) without proper or adequate ventilation.** This may cause a fire or electric shock.	**Use the unit within the proposed ambient temperature range.** Using it out of the range may cause a fire or electric shock.	**Units must not be modified.** Modifications may cause a fire or electric shock.
Do not place combustible materials near the unit. This may cause a fire.	**The grounding screw of the unit should be utilized, except when connected to a double insulation device.** Not grounding the unit may result in a fire or electric shock.	**The unit must be installed at a level higher than the water surface when it is used for bubbling.** If the unit is installed at a level lower than the water surface, fluid may flow into the unit and cause an electric shock.	**Do not allow anything to be placed on or to fall onto the lead wires.** This may damage them and cause a fire or electric shock.
Do not pull, scratch, forcefully bend, twist or heat the lead wires. This may damage them and cause a fire or electric shock.	**When incorporating the unit into a device, the lead wires from the unit should be connected securely to the wiring of the device by means of soldering, crimping or by the use of screws.** Insufficient connections may cause a fire or electric shock.	**The unit must not be disassembled or repaired by anyone other than a person who has received Nitto Kohki technical training. (Except in the case of filter and piston maintenance and inspection in accordance with the operation manual.)** Otherwise it may result in a fire or electric shock.	**The unit must be disconnected from its power source before cleaning or replacing filters.** Failure to do so may result in an electric shock or injury.

When drawing in air contaminated with moisture, powder, or dust, add an external device to the unit for removing them. If these contaminants are drawn in, it may cause an electric shock. *Only for vacuum pumps.

Precautions for Blowers

⚠ CAUTION

⚠ WARNING **Do not let the unit draw in or discharge any gas other than air.** This may cause an explosion, fire or electric shock.

Do not install the unit in a place where it may be soaked with water or covered with snow. This may cause an electric shock or fire.	**Do not use the unit in hot and humid conditions.** This may cause an electric shock, breakdown or fire.	**Always place the unit above water level.** Failure to do so may result in an electric shock or breakdown.	**Use a waterproof wall outlet to supply power to the unit.** Failure to do so may cause an electric shock or fire.
Use a power supply equipped with a ground-fault interrupter and overcurrent breaker. Failure to do so may cause an electric shock or fire.	**Have a qualified electrician do the electrical work.** Failure to do so may cause an electric shock or fire.	**Never modify the unit.** This may cause an electric shock, breakdown, or fire.	**Do not use the unit with the outlet port closed or at free displacement.** This may cause an electric shock, breakdown, or fire.
The power supply voltage must be limited to the individual unit specifications as stated on the nameplate or instruction manual. Failure to do so may cause an electric shock or fire.	**Never touch the power plug with wet hands.** This may cause an electric shock.	**Insert the power plug securely into the innermost position.** Failure to do so may cause an electric shock.	**Do not put anything on the power cable.** Doing so may cause a fire or electric shock.
Do not place anything near the unit (within about 50cm). Doing so may cause an electric shock or fire.	**Do not use the unit in a place where flammable materials, such as gasoline, thinner, lacquer, benzene, etc. are being used.** This may cause a fire or explosion.	**Check the power plug at least once a year for dirt and dust and clean if necessary.** Failure to do so may result in an electric shock or fire.	**The power plug must be disconnected before the air filter is cleaned or replaced.** Failure to do so may cause an electric shock or accident.
Always grasp the power plug to disconnect the unit from the socket. Pulling it out by the cord may cause an electric shock or breakdown.	**Any removed air filter must be replaced before the operation is resumed.** Failure to do so may cause an electric shock or breakdown.	**Never try to disassemble or repair the unit.** This may cause an electric shock, breakdown, fire or injury. Any repairs must be done by an electrician authorized by Nitto distributors.	**Do not cover the Blower with a box or the like without proper or adequate ventilation.** Doing so may cause a breakdown or fire.

Precautions for DC-Motor Pumps

Connect the plus terminal (If there is no indication of the plus terminal, use the terminal with a red mark as the plus terminal.) or the red lead wire of the unit to the plus terminal of the DC power source. Reverse connection may cause a breakdown, malfunction, or reduced rated performance.

Precautions for Liquid Pumps

⚠ CAUTION

⚠ WARNING **Confirm the suitability of the liquid that passes through the unit before use.** Failure to do so may cause a leak, explosion, fire or electric shock.

Avoid any liquid contaminated with solids such as debris or dust. If dust or debris sticks to the valve, the unit may not perform properly. When the intrusion of dust or debris is expected, be sure to place a filter on the inlet side of the unit.

Avoid any liquid that may crystallize. If crystals stick to the valve, the unit may not perform properly. A preliminary test on the unit with the liquid to be used is recommended.

The performance of the unit is measured with the pump in its proper mounting position, which is described in the user's manual. Different mounting positions or nozzle directions may result in different performances.

There may be a risk that even a slight liquid pressure can open the valve due to siphon phenomenon. Place the outlet port at a position higher than the water level in the supply tank, or install a check valve if necessary to prevent water from being siphoned into the pump.

When Using Compressors and Vacuum Pumps

Check with our distributor in advance if you plan to use the compressor/vacuum pump at free displacement (0kPa), or the vacuum pump with inlet port closed, or the compressor at maximum pressure.

As compressors and vacuum pumps employ a self-cooling system, if the units are used at more than the rated pressure, the duty cycle of some of the models will need to be shortened.

- When wanting to increase the duty cycle, it is recommended to use a fan to cool the compressor.
- Do not use the compressor near flammable liquid gas.
- Do not use the compressor in the rain or in wet and damp places.
- Do not allow the pump to draw in corrosive gas.
- Be sure to install and use the compressor at a position higher than water level.

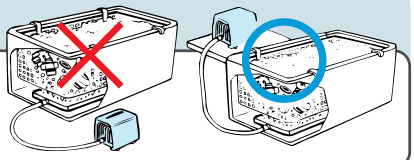

Handling Problems

In any of the below cases, stop operation immediately, switch off the power and disconnect the unit from the power supply. Ask our distributor for repair.

- When oil such as a lubricant has been applied to the unit in error.
- When the unit has suffered a severe impact such as being dropped.
- When liquid such as water has entered into the unit by mistake.
- When an abnormal operation is observed, such as the emission of smoke, or an unusual smell or noise.

Precautions for Pumps with Brush Motor

As operational time is increased, the value of insulation resistance becomes lower than that of the initial insulation resistance.
If the outer surface of motor and the grounding of the power source are connected, do a preliminarily check to assure no issues occur.

Our Product Warranty

Our Products are covered by a limited warranty ("Warranty") under the following conditions.
1. Duration: depends on individual products and their specifications
2. Service: repair or replacement at our option
Please be aware that a warranty claim will not be reimbursed with a cash payment.
3. Object Person: original purchaser from our designated distributors

4. Out of Warranty
The following conditions are not covered by Warranty
- purchaser improperly used our products.
- purchaser did not comply with specifications and instructions stipulated in this Catalog when using our products, or
- purchaser did not comply with Caution for Safety stipulated in this Catalog when using our products, or
- repairing of our products was done by someone other than us, or
- We are not able to anticipate or predict such defects or causes of failure based on general technical knowledge of the specific application before or at the time of shipment, or
- defects are caused by the force majeure or other situations not attributable to us, or
- defects are not clearly attributable to us and
- defects are not about design, material or workmanship.

Limitation of Liability

We, including designated distributors, will not be liable for any special damages or consequential damages and will not have any monetary liability to purchasers.

AIR COMPRESSORS, VACUUM PUMPS & LIQUID PUMPS

NITTO KOHKI CO., LTD.

Head Office

9-4, Nakaikegami 2-chome, Ohta-ku, Tokyo 146-8555, Japan
Tel : +81-3-3755-1111 Fax : +81-3-3753-8791 E-mail : overseas@nitto-kohki.co.jp
Web **www.nitto-kohki.co.jp/e**

Overseas Affiliates / Offices

MEDO U.S.A., INC.
46 CHANCELLOR DRIVE, ROSELLE, ILLINOIS 60172, U.S.A.
Tel : +1-630-924-8811 Fax : +1-630-924-0808
www.medousa.com

NITTO KOHKI EUROPE CO., LTD.
UNIT A5, LANGHAM PARK INDUSTRIAL ESTATE, MAPLE ROAD,
CASTLE DONINGTON, DERBYSHIRE DE74 2UT, UNITED KINGDOM
Tel : +44-1332-653800 Fax : +44-1332-987273
www.nitto-kohki.eu/en

NITTO KOHKI DEUTSCHLAND GMBH
GOTTLIEB-DAIMLER-STR. 10, 71144 STEINENBRONN, GERMANY
Tel : +49-7157-989555-0 Fax : +49-7157-989555-40
www.nitto-kohki.eu/de

NITTO KOHKI AUSTRALIA PTY LTD
77 BRANDL STREET BRISBANE TECHNOLOGY PARK
EIGHT MILE PLAINS QLD 4113, AUSTRALIA
Tel : +61-7-3340-4600 Fax : +61-73340-4640
www.nitto-australia.com.au

NITTO KOHKI (SHANGHAI) CO., LTD.
ROOM1506, SUITE C, ORIENT INTERNATIONAL PLAZA,
NO.85 LOUSHANGUAN ROAD, SHANGHAI 200336, CHINA
Tel : +86-21-6415-3935 Fax : +86-21-6472-6957
www.nitto-kohki.cn

NITTO KOHKI (SHANGHAI) CO., LTD. SHENZHEN BRANCH
2005C SHENZHEN ICC TOWER, FUHUASANLU 168,
FUTIAN DISTRICT,SHENZHEN, GUANGDONG, 518048, CHINA
Tel : +86-755-8375-2185 Fax : +86-755-8375-2187
www.nitto-kohki.cn

NITTO KOHKI CO., LTD. SINGAPORE BRANCH
10 UBI CRESCENT #01-62, UBI TECHPARK LOBBY D,
SINGAPORE 408564
Tel : +65-6227-5360 Fax : +65-6227-0192
www.nitto-kohki.co.jp/e/nksb/index.html

NITTO KOHKI CO., LTD. BANGKOK REPRESENTATIVE OFFICE
M&A BUSINESS CENTER, Q-HOUSE CONVENT BLDG.,
38 CONVENT RD., SILOM, BANGRAK,
BANGKOK 10500, THAILAND
Tel : +66-2632-0307 Fax : +66-2632-0308
www.nittobkk.com

NITTO KOHKI CO., LTD. INDIA LIAISON OFFICE
3RD FLOOR, BUILDING NO.9-A DLF CYBER CITY, PHASE-III,
GURGAON, HARYANA 122002, INDIA
Tel : +91-124-454-5031 Fax : +65-6227-0192

ISO 9001
JQA-2160
Linear Products Division
ISO 14001
JQA-EM4057
NITTO KOHKI CO., LTD.

NITTO KOHKI CO., LTD.
REGISTERED FIRM
ISO 13485 A28219

DISTRIBUTED BY

VEGETABLE OIL INK

This catalog is printed using environmentally friendly paper and vegetable oil inks.

Specifications and designs are subject to change at any time without notice.

Printed in Japan 15IA03-①